Advances in Reduced-Rank Adaptive Filtering
PI: Michael D. Zoltowski, Purdue University

Abstract

We propose fundamental advances in the area of reduced-rank adaptive filtering. Our starting point is the recently proposed Multi-Stage Nested Wiener Filter (MSNWF) of Goldstein, Reed, and Scharf. There have been recent breakthroughs relative to the MSNWF in three different areas: (i) conceptual understanding of the MSNWF and its theoretical underpinnings, (ii) efficient implementations of the MSNWF, and (iii) broadening of the scope of the type of problems to which the MSNWF may be applied (high-resolution spectrum estimation, code design, etc.) *This project proposes the development of further fundamental advances relative to the MSNWF fueled by the momentum gained by these discoveries.* The intent is to develop signal processing tools that have wide applicability.

The following are our key initial contributions serving as the foundation for this proposal.

1. We have developed a simple order-recursion for updating the weight vector and the Mean Square Error (MSE) as each new stage is added. The original MSNWF was composed of two parts: a forward recursion followed by a backward recursion. It is important to monitor the MSE as each new stage is added (new stage $\equiv$ additional basis vector from forward recursion) since the sample support may be insufficient to support an additional stage such that the addition of such may cause the MSE to increase. Since the backwards recursion coefficients completely change each time a new basis vector is added, evaluation of its impact on the MSE previously required a backwards recursion for each new added stage. Our proposed scheme allows the MSE to be updated at each stage along with the backwards-recursion coefficients via a simple recursion. This will facilitate numerous innovations relative to the MSNWF including the development of statistically based stopping rules and more efficient implementations.
2. Honig and Xiao recently showed that the rank D MSNWF solution lies in a Krylov subspace generated by the correlation matrix of the observed data and the cross-correlation vector between the desired signal and the observed data. We propose a computationally efficient scheme for generating an orthogonal basis for this Krylov subspace: each member of the orthogonal basis is generated by pre-multiplying the previous member by the data correlation matrix and subtracting off from the resulting vector its components onto only the last two members of the basis. The resulting orthogonal basis is exactly the same as that generated via the original forward recursion of the MSNWF, which tri-diagonalizes the correlation matrix at any stage, but it is computed without the need for blocking matrices as required in the original formulation of the MSNWF leading to substantially reduced computation
3. We recently developed a low-complexity, high-resolution spectrum estimation technique based on the MSNWF that performs similar to MUSIC but does not require the computation of eigenvectors. In addition, the algorithm does not require estimation of the number of sources prior to forming a spectral estimate. Yet, initial simulation studies reveal the technique, which is inherently rooted in linear prediction, has a low probability of exhibiting false alarm peaks.

Selected Research Goals.

1. The proposed order-recursive MSNWF works at the covariance level, thereby presuming formation of a sample covariance matrix. We propose to develop data level versions of the order-recursive MSNWF amenable to the modular/lattice structure of the MSNWF recently developed by Goldstein and Ricks. The latter is not order-recursive but rather requires the backwards-recursion as well as the forward recursion. The proposed data-level, order-recursive MSNWF offers the following important benefits: (i) it is order-recursive thereby updating the backwards recursion coefficients and MSE at each stage, (ii) it avoids computation of blocking matrices, and (iii) it avoids computation of a covariance matrix (for which there may not be sufficient sample support.)
2. We propose to develop a reduced-rank Decision Feedback Equalizer (DFE) based on the MSWNF. The finite alphabet constraint on the information symbols has heretofore not been exploited in the MSNWF, except in a decision-directed mode. Even that is not straightforward since the MSWNF operates in a block-processing mode. We propose some initial ideas along these lines. One proposed scheme is a two-stage process, wherein a training sequence is processed novelly by the MSNWF in such a way as to produce a low-rank estimate of a sparse channel. This is motivated by Digital TV using 8-VSB where there is a severe equalization problem. The covariance level version of the MSNWF is used in the second stage to solve the large dimension Wiener-Hopf equations in a computationally efficient manner through the inherent rank reduction.

1 Introduction and Motivation

We propose fundamental advances in the area of reduced-rank adaptive filtering. Reduced-rank adaptive filtering has a long history of seminal contributions; the seminal work of Scharf on the role of the SVD in reduced-rank signal processing is a highly noteworthy contribution. Due to space limitations, though, it is not possible to cover the entire history of reduced-rank adaptive filtering and give thereby credit here to all noteworthy contributions in this field. As a result, our starting point is the recently proposed Multi-Stage Nested Wiener Filter (MSNWF) of Goldstein, Reed, and Scharf [GR97a, GRS98]. Pados and Batalama [KBP98] have simultaneously developed the Auxiliary Vector method which is similar in concept to the MSNWF, thereby underscoring the timeliness and importance of reduced-rank adaptive filtering in a Krylov subspace generated by the correlation matrix of the observed data and the cross-correlation vector between the desired signal and the observed data. The link between Krylov subspace estimation and the MSNWF was made recently by Honig and Xiao [HX99]; this link represents a fundamental breakthrough in our conceptual understanding of the MSNWF that will be further investigated as part of this effort.

There have been recent breakthroughs relative to the MSNWF in three different areas: (i) conceptual understanding of the MSNWF and its theoretical underpinnings, (ii) efficient implementations of the MSNWF, and (iii) broadening of the scope of the type of problems to which the MSNWF may be applied (high-resolution spectrum estimation, code design, etc.) *This project proposes the development of further fundamental advances relative to the MSNWF fueled by the momentum gained by these discoveries.* The intent is to develop signal processing tools that have wide applicability. However, our target applications will be wireless digital communications, radar signal processing, and image processing.

It is noted that there has been a surge of interest from industry on this type of Krylov subspace based reduced-rank adaptive filtering, which we will here refer to as the MSNWF for the sake of brevity. For example, the PI was recently asked by Motorola, Texas Instruments, and Zenith to give a tutorial on the MSNWF at each of their respective plants. In addition, the ICASSP 2001 Tutorials Committee has asked Dr. Goldstein and the PI to give a tutorial on reduced-rank adaptive filtering including the MSNWF. Finally, workshops on rapid adaptive filtering highlighting the MSNWF and related reduced-rank schemes are currently being planned and sponsored by several government funding agencies to inform both commercial industry and the defense industry about these developments.

It is important to note that we will continue our collaborations with Dr. Scott Goldstein at SAIC, Professor Irving Reed at USC, and Professor Michael Honig at Northwestern University. A strong synergism has evolved fueling a highly productive collaboration with numerous breakthroughs relative to MSNWF.

1.1 Outline of Proposal and Overview of Proposed Effort

Background I: Importance of reduced-rank adaptive filtering. In addition to the discussion in Section 2, we note here several applications where the MSNWF has been applied with great success:

1. Goldstein and Reed have sucessfully applied the MSNWF to a broad spectrum of radar signal processing problems [GR97b, GRZ99]

2. Honig applied MSNWF to Multi-User Access Interference (MAI) suppression for asynchronous CDMA operating in code-space where the weight vector dimensionality can be quite high [HG00, HX99]. Honig et. al. showed that the number of necessary MSNWF stages even for a heavily loaded CDMA system is a mere fraction of the subspace dimension required by the eigen-space based methods.

3. Willsky has not applied MSNWF per se, but has applied Krylov subspace estimation principles to the problem of error variance estimation in multi-resolution image processing [SW99]. The Krylov subspace basis framework makes this work inherently related to the MSNWF.

4. The PI has applied the MSNWF to interference suppression for GPS receivers [Zol00aa, Zol00a, Zol00b, Zol00c] and equalization for the forward-link CDMA with long code [Zol00d, Zol00e, Zol00f]

Background II: Brief foundational development of original formulation of MSNWF.

Background III: Illustrative simulation example demonstrating performance gains of MSNWF. The example demonstrates that the MSNWF converges much more quickly than LMS, and more quickly than RLS as well, with reduced computational complexity relative to RLS. There are no eigenvectors to compute or track. Thus, the MSNWF offers both improved performance and reduced computational complexity relative to PC based reduced-rank filtering as well. [GRZ99, HG00, HX99, Zol00aa, Zol00a].

Overview I: Recent fundamental advances on MSNWF. These include three recent discoveries:

1. Ricks and Goldstein [Ricks00] showed that the MSNWF can be implemented without blocking matrices as required in the original algorithmic formulation. This further reduces the computational complexity of the MSNWF relative to full-rank RLS or PC based reduced-rank adaptive filtering.

2. Ricks and Goldstein [Ricks00] developed a lattice/modular MSNWF structure facilitating an efficient data-level implementation as an alternative to the original covariance level implementation. Avoiding the need to form a covariance matrix is advantageous since (i) it reduces computationally complexity, (ii) it facilitates real-time implementation, and (iii) because there may not be enough sample support to form a reliable covariance matrix estimate, especially when the data vector is high-dimensional and/or the signal statistics are rapidly time-varying.

3. Honig and Xiao [HX99] have proven an inherent relationship between MSNWF and Krylov subspace estimation: stopping the MSNWF at stage D constrains the weight vector to lie in the D-dimensional subspace spanned by $\{ \mathbf{r}_{\mathbf{x_0},\mathbf{d_0}}, \mathbf{R}_{\mathbf{x_0}}\mathbf{r}_{\mathbf{x_0},\mathbf{d_0}}, ..., \mathbf{R}_{\mathbf{x_0}}^{D-1}\mathbf{r}_{\mathbf{x_0},\mathbf{d_0}} \}$, where $\mathbf{R}_{\mathbf{x_0}}$ is the correlation matrix of the observed data and $\mathbf{r}_{\mathbf{x_0},\mathbf{d_0}}$ is the cross-correlation vector between the observation data and the desired signal. This is a very important discovery relative to the theoretical underpinnings of the MSNWF and its relation to other techniques employed in numerical analysis that operate in a Krylov subspace

Overview II: Recent fundamental advances on MSNWF by PI. The following are our key initial contributions serving as the foundation for this proposal. Other than in a recent internal Technical Report [Joh00a] (and a submission to ICASSP 2001), they are being reported in Section 5 for the first time.

1. We recently developed a computationally efficient scheme for generating an *orthogonal* basis for the Krylov subspace spanned by $\{ \mathbf{r}_{\mathbf{x_0},\mathbf{d_0}}, \mathbf{R}_{\mathbf{x_0}}\mathbf{r}_{\mathbf{x_0},\mathbf{d_0}}, ..., \mathbf{R}_{\mathbf{x_0}}^{D-1}\mathbf{r}_{\mathbf{x_0},\mathbf{d_0}} \}$: each successive member of the basis is generated by multiplying the previous member by $\mathbf{R}_{\mathbf{x_0}}$ and subtracting off from the resulting vector its components onto only the last two members of the basis. The resulting orthogonal basis is exactly the same as that generated via the original forward recursion of the MSNWF, which tri-diagonalizes $\mathbf{R}_{\mathbf{x_0}}$ at any stage, but it is computed without the need for blocking matrices as required in the original formulation of the MSNWF [GRS98] leading to substantially reduced computation.

2. We have developed a simple order-recursion for updating the weight vector and the MSE as each new stage is added. The original MSNWF was composed of two parts: a forward recursion followed by a backward recursion. Now, it is important to monitor the Mean Square Error (MSE) as each new stage is added (new stage $\equiv$ additional basis vector from forward recursion) since the sample support may be insufficient to support an additional stage such that the addition of such may cause the MSE to increase. Since the backwards recursion coefficients completely change each time a new basis vector is added, evaluation of its impact on the MSE previously required a backwards recursion for each new added stage. Our contribution, developed in Section 5.1, allows the MSE to be updated at each stage along with the backwards-recursion coefficients via a simple recursion. *This is a recent breakthrough that is the motivation and foundation for this proposal.* It will facilitate numerous innovations relative to the MSNWF including the development of statistically based stopping rules and analyzing the connection to Conjugate Gradient iterative search techniques, discussed next, since it provides a direct expression for how the weight vector is updated each time a new stage is added.

3. We recently discovered a strong connection between the MSNWF and the Conjugate-Gradient iterative search technique [Joh00a]. The fact that an iterative search algorithm is related to a reduced-rank method is a fascinating connection that was initially quite surprising.

4. Collaborating with Witzgall and Goldstein at SAIC [Zol00h, Zol00i], we recently developed a low-complexity, high-resolution spectrum estimation technique based on the MSNWF that performs similar to MUSIC but does not require the computation of eigenvectors. In addition, the algorithm does not require estimation of the number of sources prior to forming a spectral estimate. Yet, initial simulation studies reveal the technique, which is inherently rooted in linear prediction, has a low probability of exhibiting false alarm peaks.

Overview III: Proposed Research Goals. Several of these are developed in detail in Sections 5 and 6. However, a number of these research goals are only briefly described here due to space limitations.

1. The order-recursive MSNWF developed in Section 5.1 works at the covariance level, thereby presuming formation of a sample covariance matrix. We propose to develop data level versions of the order-recursive MSNWF amenable to the modular/lattice structure of the MSNWF recently developed by Goldstein and Ricks [Ricks00]; the latter is not order-recursive but rather requires a backwards-recursion as well as a forward recursion. The proposed data-level, order-recursive MSNWF offers the following important benefits: (i) it is order-recursive thereby updating the backwards recursion coefficients and MSE at each stage, (ii) it avoids computation of blocking matrices, and (iii) it avoids computation of a covariance matrix (for which there may not be sufficient sample support.)

2. We propose to fully exploit the recently discovered connection between the MSNWF and conjugate gradient (CG) search methods. The inherent relationship between the two follows from the aforementioned connection between the MSNWF and Krylov subspace estimation since at each iteration the standard form of the CG search method minimizes $\mathbf{w}^H\mathbf{R}_{\mathbf{x_0}}\mathbf{w}+\mathbf{w}^H\mathbf{r}_{\mathbf{x_0},\mathbf{d_0}}+\mathbf{r}^H_{\mathbf{x_0},\mathbf{d_0}}\mathbf{w}$ in the Krylov subspace generated by $\mathbf{R}_{\mathbf{x_0}}$ and $\mathbf{r}_{\mathbf{x_0},\mathbf{d_0}}$. The fact that an iterative search algorithm is related to a reduced-rank adaptive filtering scheme is a fascinating connection. This realization opens the door to the use of a number of numerical analysis tools for analyzing the performance of the MSNWF.

3. We propose to develop a reduced-rank Decision Feedback Equalizer (DFE) based on the MSWNF. The finite alphabet constraint on the information symbols has heretofore not been exploited in the MSNWF, except in a decision-directed mode. Even that is not straightforward since the MSWNF operates in a block-processing mode. One proposed scheme for a reduced-rank DFE is a two-stage process, wherein a training sequence is first processed novelly by the MSNWF in such a way as to produce a low-rank estimate of a sparse channel. This is motivated by Digital TV using 8-VSB where there is a severe equalization problem. The covariance level version of the MSNWF is used in the second stage to solve the large dimension Wiener-Hopf equations, where the "data" includes past symbol estimates, in a computationally efficient manner through the inherent rank reduction.

4. We propose to incorporate multiple constraints into the MSNWF. In addition to its use in implicitly solving the Weiner-Hopf equations $\mathbf{R}_{\mathbf{x_0}}\mathbf{w} = \mathbf{r}_{\mathbf{x_0},\mathbf{d_0}}$ through reduced-rank adaptation, the MSNWF can be used to solve Minimum Variance problems of the form:

$$\begin{aligned} \mathbf{w} &= \arg\min_{\mathbf{w}} \mathbf{w}^H\mathbf{R}_{\mathbf{x_0}}\mathbf{w} \\ \text{s.t.:} \quad & \mathbf{d}^H\mathbf{w} = 1 \end{aligned} \tag{1}$$

   where $\mathbf{d}$ is the signature vector for the desired user (array manifold vector, code, etc.) which is either known or estimated a-priori. In this scenario, $\mathbf{r}_{\mathbf{x_0},\mathbf{d_0}} \propto \mathbf{d}$; we effectively know $\mathbf{r}_{\mathbf{x_0},\mathbf{d_0}}$ to within an unknown multiplicative scalar. The solution to (1) may be computed as the solution to $\mathbf{R}_{\mathbf{x_0}}\mathbf{w} = \lambda\mathbf{d}$; λ is a scalar used to satisfy the constraint in (1). Both the covariance and data level versions of the MSNWF can be used to solve constrained minimum variance problems of this form. However, some applications involve multiple constraints (to effect smoothness, for example) in the form of a constraint matrix equation $\mathbf{C}^H\mathbf{w} = \boldsymbol{\delta}$. The incorporation of multiple constraints into the MSNWF has not yet been developed. We will also develop how to modify the recently developed "data-level" modular/lattice form of the MSNWF [Ricks00] to accommodate multiple constraints.

5. Autoregressive (AR) spectral estimation is inherently related to linear prediction (LP), thereby establishing well known ties between LP based spectral estimation and adaptive filtering. This motivated our recent development of a reduced-rank based spectral estimation scheme based on the MSNWF [Zol00h, Zol00i]. In this application, the MSNWF effects power minimization under a unity tap constraint on the "weight" vector. Initializing the forward recursion of the MSNWF with the standard basis vector $\mathbf{e}_1$, where $\mathbf{e}_i$ contains all zeros except for a one in the i-th position (so that the first value of each data block effectively serves as a "desired" signal), initial simulations reveal the MSNWF to rapidly converge to a "weight" vector that lies in the noise subspace. The reciprocal of the magnitude square of the Fourier Transform of this "weight" vector is the spectral estimate and has been observed to exhibit a low background level with very low probability of false alarm peaks. The initial simulations are quite astounding: stopping the MSNWF at stage 3 facilitated reliable estimation of the directions of 40 signals impinging upon a linear array of 128 antenna elements [Zol00h, Zol00i]. The performance achieved is similar to MUSIC without the need for the computating eigenvectors or the need to estimate the number of sources prior to forming the spectral estimate.

We propose to further develop and analyze reduced-rank spectral estimation schemes. One idea for further decreasing the probability of false alarms is to run multiple MSNWF's in parallel, each initialized with a different standard basis vector $\mathbf{e}_i$, and to average the resulting spectral estimates. Efficient implementations will exploit the commonality of the data amongst the parallel MSNWF's.

6. The idea of running multiple MSNWF's in parallel, each initialized with a different standard basis vector $\mathbf{e}_i$, also has relevance to equalization of a *sparse* channel. To see this, first note that even if the channel is sparse, the equalizing filter vector $\mathbf{g}$ is not sparse. However, the MMSE equalizer may be expressed as $\mathbf{g} = \mathbf{R}_{\mathbf{x_0}}^{-1}\tilde{\mathbf{h}}$, where $\tilde{\mathbf{h}}$ contains the time-reverse of the sparse channel impulse response (plus zero padding for the general case where $\mathbf{g}$ is longer than the channel.) Since the multipath time-delays do not vary as rapidly as the corresponding complex gains, they may be estimated well enough to isolate a small number of nonzero values of the vector $\tilde{\mathbf{h}}$ to adapt in order to match the multipath gains [Zol00g]. The approximation is then $\mathbf{g} = \sum_{i=1}^{P} h[I(i)]\mathbf{b}_{I(i)}$ where $I(i)$ is an index set selecting only the P nonzero coefficients of $\tilde{\mathbf{h}}$ corresponding to the estimated time delays of the P dominant multipaths (estimation error can be accommodated by small clusters centered around each estimated time delay). The basis vectors $\mathbf{b}_{I(i)} = \mathbf{R}_{\mathbf{x_0}}^{-1}\mathbf{e}_{I(i)}$ are the solution to $\mathbf{R}_{\mathbf{x_0}}\mathbf{b}_{I(i)} = \mathbf{e}_{I(i)}$ which may be efficiently computed by running multiple MSNWF's in parallel, each initialized with a different standard basis vector $\mathbf{e}_{I(i)}$. This procedure is easily modified to incorporate a known transmit pulse shape by replacing $\mathbf{e}_{I(i)}$ by an appropriately shifted version of the sampled transmit pulse shape. The point is that although the channel length and, hence, the required equalizer length may be quite high, only a small number of coefficients have to be adapted via this procedure.

   We will also investigate low-rank inversion of $\mathbf{R}_{\mathbf{x_0}}$ by initializing the MSNWF with a column of $\mathbf{R}_{\mathbf{x_0}}$, thereby generating a non-orthogonal basis (not eigenvectors) that diagonalizes $\mathbf{R}_{\mathbf{x_0}}$ [GRS98].

7. The use of multiple MSNWF's running in parallel will also be developed for Multi-User Detection (MUD) employing parallel interference cancellation. Each MSNWF provides a reduced-rank MMSE estimate of the respective signal from one of the multiple users. Communication amongst the multiple MSNWF's will be used to enhance the interference suppression capability of any one MSNWF by subtracting estimates of the other users' signals based on either hard or soft decisions on their respective symbols. Recent developments on iterative/Turbo MUD by Poor et al. will be incorporated to diminish the performance gap between MMSE with single-user and that with multi-user [Poor00].

2 Background I: Importance of reduced-rank adaptive filtering.

The *Wiener filter* (WF) estimate of an unknown signal $d_0[n]$ from an observation $\mathbf{x}_0[n]$ is optimal in the *Minimum Mean Square Error* (MMSE) sense, and optimal in the *Bayesian sense* if the signals $d_0[n]$ and $\mathbf{x}_0[n]$ are jointly Gaussian random variables. The WF is employed in many applications because it is easily implemented and only relies on second order statistics. However, the resulting filter depends upon the inverse of the covariance matrix, $\mathbf{R}_{\mathbf{x_0}}$. If the observation $\mathbf{x}_0[n]$ is of high dimensionality, a reduced-rank approach is needed in order to reduce computational complexity and lessen sample support requirements. The current strong need for reduced-rank adaptive filtering arises from the growing disparity between the large number of degrees of freedom in the next generation of wireless communications systems, radar systems, sonar systems, etc., and limitations on sample support size due to high mobility, high sensitivity to small movements/perturbations (due to a high operating frequency and/or a large aperture), etc. For example, the incorporation of both polarization and space as additional discriminating features in both communications and radar systems increases the number of degrees of freedom that need to be adapted.

In the *Principal Components* (PC) method [Hot33, EY36], the observation signal is transformed to lower dimensionality by a matrix composed of the eigenvectors belonging to the principal eigenvalues. The WF with respect to the new observation is easily obtained since the covariance matrix of the new observation is a diagonal matrix with the principal eigenvalues as its entries. However, the PC method only takes into account the statistics of the observation signal and does not consider the relation to the desired signal. The *Cross-Spectral Metric* (CSM) of Goldstein et. al. [GR97b] is an alternative reduced-rank method that selects those eigenvectors that maximize a metric based on the cross-correlation vector between the observation and the desired signal and does not choose the principal eigenvectors, in general. However, Goldstein, Reed, & Scharf ultimately presented the *Multi-Stage Nested Wiener Filter* (MSNWF) [GRS98] which showed that rank reduction based on the eigenvectors is suboptimum. The MSNWF does not require the computation of eigenvectors and is thus computationally advantageous as well.

3 Background II: Brief development of original MSNWF.

Referring to Figure 1, the desired signal $d_0[n] \in \mathbf{C}$ is estimated by applying the linear filter $\mathbf{w} \in \mathbf{C}^N$ to the observation signal $\mathbf{x}_0[n] \in \mathbf{C}^N$. The variance of the estimation error $\varepsilon_0[n] = d_0[n] - \hat{d}_0[n] = d_0[n] - \mathbf{w}^H \mathbf{x}_0[n]$ is the *mean squared error* $\text{MSE}_0 = \mathcal{E}\{|\varepsilon_0|^2\} = \sigma_{d_0}^2 - \mathbf{w}^H \mathbf{r}_{\mathbf{x_0},\mathbf{d_0}} - \mathbf{r}_{\mathbf{x_0},\mathbf{d_0}}^H \mathbf{w} + \mathbf{w}^H \mathbf{R}_{\mathbf{x_0}} \mathbf{w}$, where the covariance matrix of the observation $\mathbf{x}_0[n]$ is $\mathbf{R}_{\mathbf{x_0}} = \mathcal{E}\{\mathbf{x}_0[n]\mathbf{x}_0^H[n]\} \in \mathbf{C}^{N \times N}$. The variance of the desired signal $d_0[n]$, $\sigma_{d_0}^2 = \mathcal{E}\{|d_0[n]|^2\}$, and the cross-correlation between $d_0[n]$ and $\mathbf{x}_0[n]$ is denoted $\mathbf{r}_{\mathbf{x_0},\mathbf{d_0}} = \mathcal{E}\{\mathbf{x}_0[n] d_0^*[n]\}$.

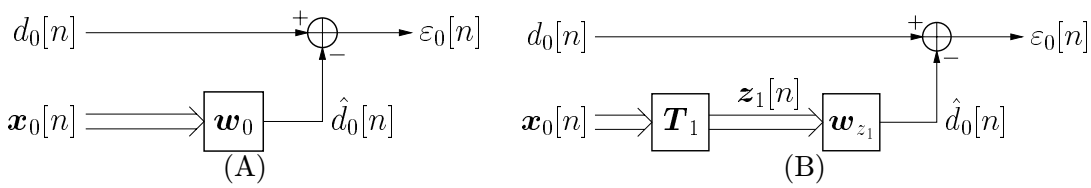

Figure 1: (A) Weiner Filter. (B) Same but with Full Rank (Square) Matrix Pre-Filtering.

The Wiener Filter $\mathbf{w}_0$ minimizing the *mean squared error* (MSE) is the solution to the Wiener-Hopf equation

$$\mathbf{R}_{\mathbf{x_0}} \mathbf{w}_0 = \mathbf{r}_{\mathbf{x_0},\mathbf{d_0}} \quad \Rightarrow \quad \mathbf{w}_0 = \mathbf{R}_{\mathbf{x_0}}^{-1} \mathbf{r}_{\mathbf{x_0},\mathbf{d_0}} \in \mathbf{C}^N. \tag{2}$$

The *minimum mean squared error* (MMSE) achieved with with the WF is

$$\text{MMSE}_0 = \sigma_{d_0}^2 - \mathbf{r}_{\mathbf{x_0},\mathbf{d_0}}^H \mathbf{R}_{\mathbf{x_0}}^{-1} \mathbf{r}_{\mathbf{x_0},\mathbf{d_0}}. \tag{3}$$

As discussed previously, the *Multi-Stage Nested Wiener Filter* (MSNWF) was developed by Goldstein et. al. [GR97a, GRS98] as a means for computing an approximate solution of the Wiener-Hopf equation (cf. Equation 2) that does not require the inverse or the eigenvalue decomposition of the covariance matrix. The approximation for the Wiener filter is found by stopping the recursive algorithm after D steps, hence, the approximation lies in a D-dimensional subspace of $\mathbf{C}^N$. To briefly develop the *Multi-Stage Nested Wiener Filter* (MSNWF), we first note the following theorem which is well-known and easy to prove.

Theorem 1 *If the observation $\mathbf{x}_0[n]$ to estimate $d_0[n]$ is pre-filtered by a full-rank matrix $\mathbf{T} \in \mathbf{C}^{N \times N}$, i. e., $\mathbf{z}_1[n] = \mathbf{T}\mathbf{x}_0[n]$, the Wiener filter $\mathbf{w}_{\mathbf{z_1}}$ to estimate $d_0[n]$ from $\mathbf{z}_1[n]$ leads to the same minimum MSE.*

Applying a full rank pre-filtering matrix of the form

$$\mathbf{T}_1 = \begin{bmatrix} \mathbf{h}_1^H \\ \mathbf{B}_1 \end{bmatrix} \in \mathbf{C}^{N \times N} \tag{4}$$

we obtain the new observation signal

$$\mathbf{z}_1 = \mathbf{T}_1 \mathbf{x}_0[n] = \begin{bmatrix} \mathbf{h}_1^H \mathbf{x}_0[n] \\ \mathbf{B}_1 \mathbf{x}_0[n] \end{bmatrix} = \begin{bmatrix} d_1[n] \\ \mathbf{x}_1[n] \end{bmatrix} \in \mathbf{C}^N \tag{5}$$

which does not change the estimate $\hat{d}_0[n]$ when the MSE is minimized as indicated previously. The rows of $\mathbf{B}_1$ are chosen to be orthogonal to $\mathbf{h}_1^H$ so that $\mathbf{B}_1$ is referred to as a Blocking Matrix.

$$\mathbf{B}_1 \mathbf{h}_1 = \mathbf{0} \qquad \text{or} \quad \mathbf{B}_1 = \text{null}(\mathbf{h}_1^H)^H. \tag{6}$$

The intuitive choice for the first row, $\mathbf{h}_1^H$, is the vector which, when applied to $\mathbf{x}_0[n]$, gives a scalar signal $d_1[n]$ that has maximum correlation with the desired signal $d_0[n]$. Constraining $\|\mathbf{h}_1\|_2 = 1$ and forcing $d_1[n]$ to be "in-phase" with $d_0[n]$, i. e. the correlation between $d_0[n]$ and $d_1[n]$ is real-valued, without loss of generality, leads to following optimization problem $\mathbf{h}_1 = \arg\max_{\mathbf{h}} \mathcal{E}\{\text{Real}(d_1[n] d_0^*[n])\}$ or $\mathbf{h}_1 = \arg\max_{\mathbf{h}} \frac{1}{2}(\mathbf{h}^H \mathbf{r}_{\mathbf{x_0},\mathbf{d_0}} + \mathbf{r}_{\mathbf{x_0},\mathbf{d_0}}^H \mathbf{h})$, subject to $\mathbf{h}^H \mathbf{h} = 1$. The solution is the normalized matched filter

$$\mathbf{h}_1 = \frac{\mathbf{r}_{\mathbf{x_0},\mathbf{d_0}}}{\|\mathbf{r}_{\mathbf{x_0},\mathbf{d_0}}\|_2} \in \mathbf{C}^N. \tag{7}$$

The solution to the Wiener-Hopf equation associated with the transformed system in Figure 1 (B) is

$$\mathbf{w}_{\mathbf{z_1}} = \mathbf{R}_{\mathbf{z_1}}^{-1}\mathbf{r}_{\mathbf{z_1},\mathbf{d_0}} \in \mathbf{C}^N, \quad \text{where:} \quad \mathbf{R}_{\mathbf{z_1}} = \begin{bmatrix} \sigma_{d_1}^2 & \mathbf{r}_{\mathbf{x_1},\mathbf{d_1}}^H \\ \mathbf{r}_{\mathbf{x_1},\mathbf{d_1}} & \mathbf{R}_{\mathbf{x_1}} \end{bmatrix} \in \mathbf{C}^{N\times N} \tag{8}$$

is the covariance matrix of $\mathbf{z}_1[n]$, $\sigma_{d_1}^2 = \mathcal{E}\{|d_1[n]|^2\} = \mathbf{h}_1^H\mathbf{R}_{\mathbf{x_0}}\mathbf{h}_1$, $\mathbf{r}_{\mathbf{x_1},\mathbf{d_1}} = \mathcal{E}\{\mathbf{x}_1[n]d_1^*[n]\} = \mathbf{B}_1\mathbf{R}_{\mathbf{x_0}}\mathbf{h}_1 \in \mathbf{C}^{N-1}$, and $\mathbf{R}_{\mathbf{x_1}} = \mathcal{E}\{\mathbf{x}_1[n]\mathbf{x}_1^H[n]\} = \mathbf{B}_1\mathbf{R}_{\mathbf{x_0}}\mathbf{B}_1^H \in \mathbf{C}^{(N-1)\times(N-1)}$. By design, the cross-correlation between $\mathbf{z}_1[n]$ and $d_1[n]$ is a scalar multiple of the standard basis vector $\mathbf{e}_1$, where $\mathbf{e}_i$ denotes a unit norm vector with a one in the i-th position and zeroes elsewhere.

$$\mathbf{r}_{\mathbf{z_1},\mathbf{d_0}} = \mathbf{T}_1\mathbf{r}_{\mathbf{x_0},\mathbf{d_0}} = \|\mathbf{r}_{\mathbf{x_0},\mathbf{d_0}}\|_2 \ \ \mathbf{e}_1 \in \mathbf{R}^N, \tag{9}$$

Thus, the Wiener filter $\mathbf{w}_{\mathbf{z_1}}$ of the pre-filtered signal $\mathbf{z}_1[n]$ is just a weighted version of the first column of the inverse of the covariance matrix $\mathbf{R}_{\mathbf{z_1}}$ in Equation (8). Applying the matrix inversion lemma for partitioned matrices [GR97a, GRS98] yields

$$\mathbf{w}_{\mathbf{z_1}} = \alpha_1 \begin{bmatrix} 1 \\ -\mathbf{R}_{\mathbf{x_1}}^{-1}\mathbf{r}_{\mathbf{x_1},\mathbf{d_1}} \end{bmatrix} \in \mathbf{C}^N, \qquad \text{where:} \ \ \alpha_1 = \|\mathbf{r}_{\mathbf{x_0},\mathbf{d_0}}\|_2(\sigma_{d_1}^2 - \mathbf{r}_{\mathbf{x_1},\mathbf{d_1}}^H\mathbf{R}_{\mathbf{x_1}}^{-1}\mathbf{r}_{\mathbf{x_1},\mathbf{d_1}})^{-1}. \tag{10}$$

Equation (10) is the key equation to understanding the basic concept underlying the MSNWF.

The most important observation in Equation (10) is that the vector in brackets, when applied to $\mathbf{z}_1[n]$, gives the error signal $\varepsilon_1[n]$ of the Wiener filter that estimates $d_1[n]$ from $\mathbf{x}_1[n]$. That is,

$$\varepsilon_1[n] = d_1[n] - \hat{d}_1[n] = d_1[n] - \mathbf{w}_1^H\mathbf{x}_1[n] = \left[1, -\mathbf{w}_1^H\right]\mathbf{z}_1[n] \tag{11}$$

achieved with the Wiener filter below (again, $\mathbf{r}_{\mathbf{x_1},\mathbf{d_1}} = \mathcal{E}\{\mathbf{x}_1[n]d_1^*[n]\} = \mathbf{B}_1\mathbf{R}_{\mathbf{x_0}}\mathbf{h}_1$ and $\mathbf{R}_{\mathbf{x_1}} = \mathcal{E}\{\mathbf{x}_1[n]\mathbf{x}_1^H[n]\} = \mathbf{B}_1\mathbf{R}_{\mathbf{x_0}}\mathbf{B}_1^H$):

$$\mathbf{w}_1 = \mathbf{R}_{\mathbf{x_1}}^{-1}\mathbf{r}_{\mathbf{x_1},\mathbf{d_1}} \in \mathbf{C}^{N-1}. \tag{12}$$

Referring to Figure 2, another key observation is that α_1 may be interpreted as a scalar Wiener filter

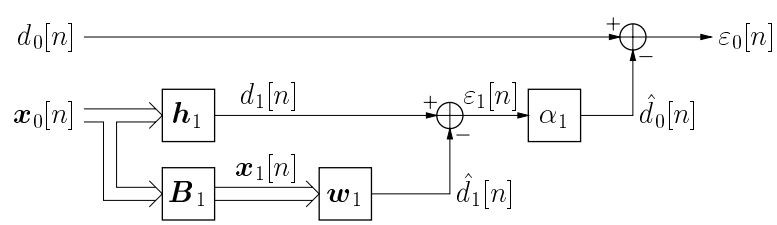

Figure 2: MSNWF after the First Step.

for estimating $d_0[n]$ from the error $\varepsilon_1[n]$. To see this, the scalar Wiener-Hopf Equation is $\mathcal{E}\{|\varepsilon_1[n]|^2\}\alpha_1 = \mathcal{E}\{\varepsilon_1^*[n]d_0[n]\}$. From previous definitions and the blocking property in (6), it is easily shown that

$$\mathcal{E}\{|\varepsilon_1[n]|^2\} = \sigma_{d_1}^2 - \mathbf{r}_{\mathbf{x_1},\mathbf{d_1}}^H\mathbf{w}_1 = \sigma_{d_1}^2 - \mathbf{r}_{\mathbf{x_1},\mathbf{d_1}}^H\mathbf{R}_{\mathbf{x_1}}^{-1}\mathbf{r}_{\mathbf{x_1},\mathbf{d_1}}; \qquad \mathcal{E}\{\varepsilon_1^*[n]d_0[n]\} = \mathbf{h}_1^H\mathbf{r}_{\mathbf{x_1},\mathbf{d_1}} = \|\mathbf{r}_{\mathbf{x_0},\mathbf{d_0}}\|_2 \tag{13}$$

Thus, we have $\alpha_1 = \|\mathbf{r}_{\mathbf{x_0},\mathbf{d_0}}\|_2(\sigma_{d_1}^2 - \mathbf{r}_{\mathbf{x_1},\mathbf{d_1}}^H\mathbf{R}_{\mathbf{x_1}}^{-1}\mathbf{r}_{\mathbf{x_1},\mathbf{d_1}})^{-1}$, which agrees with (10).

These observations relative to stage 1 of the decomposition, particularly Equations (11) and (12), lead naturally to the next stage of the MSNWF decomposition. In the second stage, the output of the Wiener filter $\mathbf{w}_1$ with dimension $N-1$ is replaced by the weighted error signal $\varepsilon_2[n]$ of a Wiener filter which estimates the output signal $d_2[n]$ of the matched filter $\mathbf{h}_2$ from the blocking-matrix output $\mathbf{x}_2[n] = \mathbf{B}_2\mathbf{x}_1[n]$. Following this through N stages, we have the original formulation of the MSNWF depicted in Figure 3. The reduced-rank MSNWF of rank D is easily obtained by stopping the MSNWF decomposition after $D-1$ steps and replacing the last Wiener filter $\mathbf{w}_{D-1}$ by the appropriate matched filter.

To understand the importance of the innovations proposed herein relative to the MSNWF, it is important to keep in mind two key drawbacks of the original algorithmic formulation of the MSNWF depicted in

Figure 3. First, the nested matched filters $\mathbf{h}_i$ and blocking matrices $\mathbf{B}_i$ are computed sequentially through the forward recursion. Only after the forward recursion is truncated at some stage D to effect rank-reduction can one then subsequently execute the backwards recursion to compute the scalar Wiener filters w_i in reverse order. If one wanted to determine the MSE as each new stage is added, to decide which stage to terminate at, for example, one had to ostensibly execute both the forwards and backwards recursion on a per stage basis since the backwards recursion coefficients completely change with each new stage that is added. Second, formation of the blocking matrices represents a significant computational task. Both of these drawbacks are being eliminated with the innovations proposed herein. Note that Goldstein and Ricks [Ricks00] recently developed a data-level modular/lattice structure for the MSNWF that also avoids the formation of blocking matrices, but still requires a backwards recursion after the forward recursion. Note

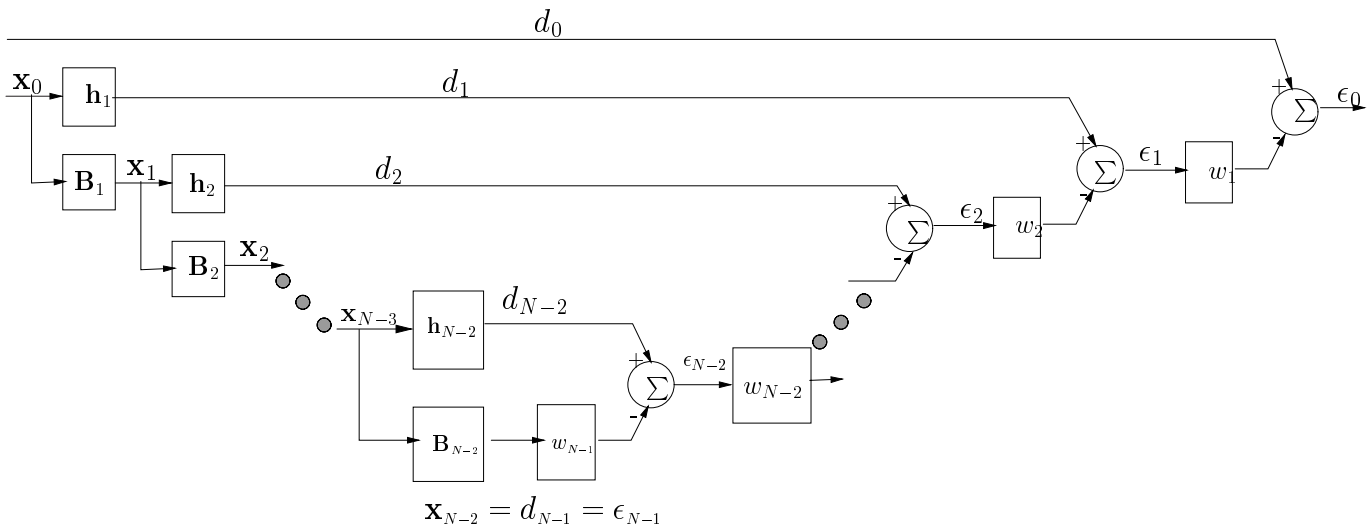

Figure 3: Structure of initial conception of the Multistage Nested Weiner Filter.

that the filter bank underlying the MSNWF can be synthesized without actually forming the covariance matrix $\mathbf{R}_{\mathbf{x_0}}$. This is because at the i-th stage the Wiener filter is replaced by a normalized matched filter that is simply the cross-correlation between the new observation $\mathbf{x}_i[n]$ and the new desired signal $d_i[n]$. Thus, only an estimation of this cross-correlation is needed with each new stage that is added. Observing

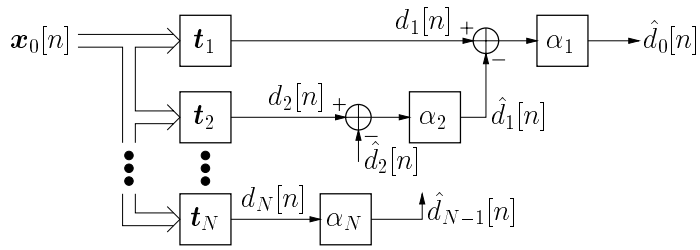

Figure 4: MSNWF as a Filter Bank

Figure 3, it is straightforward to see that each new desired signal $d_i[n], i = 1, \ldots, N$, is the output of a length N filter

$$\mathbf{t}_i = (\prod_{k=1}^{i-1} \mathbf{B}_k^H)\mathbf{h}_i \in \mathbf{C}^N. \tag{14}$$

That is, the chain of nested Weiner Filters in Figure 3 may be replaced by the simple filter bank in Figure 4, where the N length filters $\mathbf{t}_i$ are computed in terms of the matched filters $\mathbf{h}_i$'s and the blocking matrices $\mathbf{B}_i$'s in Figure 3 according to Equation (14). Referring to Figure 4, a very important property is that the

pre-filtered observation vector

$$\mathbf{d}[n] = [d_1[n], \ldots, d_N[n]]^T, \tag{15}$$

has a tri-diagonal covariance matrix [GRS98]. This can be understood with the help of Figures 2 and 4. The matched filter $\mathbf{t}_i$ is designed to retrieve all information of $d_{i-1}[n]$ that can be found in $\mathbf{x}_{i-1}[n]$. Therefore, the output of $\mathbf{t}_i$, $d_i[n]$, is correlated with $d_{i-1}[n]$ and also with $d_{i+1}[n]$, because $\mathbf{t}_{i+1}$ is the matched filter to find $d_i[n]$. But $d_{i+1}[n]$ includes no information about $d_{i-1}[n]$, since the input of $\mathbf{t}_{i+1}$ was pre-filtered by the blocking matrix $\mathbf{B}_{i+1}$. Consequently, $d_i[n]$ is only correlated with its neighbors $d_{i-1}[n]$ and $d_{i+1}[n]$ leading to a tri-diagonal covariance matrix.

4 Background III. Illustrative 3G CDMA Simulation

As an illustrative example, a wideband CDMA **forward link** was simulated similar to one of the options in the US cdma2000 proposal. The chip rate was 3.6864 MHz ($T_c = 0.27\mu s$), 3 times that of IS-95. Simulations were performed for a "saturated cell": all 64 channel codes were "active" with equal power. For each user, each BPSK data symbol was spread with one of 64 Walsh-Hadamard sequences of length 64. Due to the frequency selective nature of the multipath channel in a high-speed (wideband) 3G CDMA link, the advantage of employing orthogonal Walsh-Hadarmard sequences relative to avoiding multi-user access interference is destroyed and the RAKE receiver performs poorly, especially in a saturated case. Chip-level equalization is thus effected at the receiver in order to estimate the synchronous sum signal transmitted from the base station and thereby effectively exploit the orthogonality of the Walsh-Hadamard codes.

All users were of equal power, and their signals were summed synchronously and then multiplied with a QPSK scrambling code of length 32678. The channels were modeled to have four equal-power multi-paths, the first one arriving at 0, the last at $10\mu s$ (corresponding to about 37 chips) and the other two delays picked at random in between. The multipath coefficients are complex normal, independent random variables with equal variance. The receiver was assumed to have a dual antenna. The arrival times at antenna 1 and 2 are the same, but the multipath coefficients are independent.

In the two base-station case, the channels are scaled so that the total energy from each of the two base-stations is equal at the receiver. The 4 multi-path arrivals from the 2nd base-stations are random, with maximum delay spread of $10\mu s$. SNR is defined to be the ratio of the sum of the average power of the received signals over all the channels, to the average noise power, after chip-matched filtering. The abscissa is the **post**-correlation SNR for *each* user which includes a processing gain of $10\log(64) \approx 18$ dB.

Figure 5 plots the Mean-Square Error for the different reduced-rank methods as a function of the subspace dimension, D. The channel statistics and noise power are assumed to be known (i.e. perfect channel estimation). In the single base-station case, 5(a), the dimension of the full space is 114 (the equalizer length is 57 at each of 2 antennas, as multipath delay spread is 37 chips and the chip pulse waveform is cut off after 5 chips at both ends). The MSE for MSNWF is seen to drop dramatically with D, and achieves the performance of the full-rank Wiener filter at dimension approximately 7! In contrast, the dimensionality required for Principal Components method to achieve near optimum MMSE is more than twice the delay spread, and the required dimensionality for the Cross-spectral method is also high.

Figure 6(a) displays the BER curves obtained with the MSNWF for different sizes of the reduced-dimension subspace. The channel statistics are assumed to be known perfectly, so these curves serve as an informative upper bound on the performance. It is observed that even a 2-stage reduced-rank filter outperforms the RAKE at all SNR's and only a small number of stages of the MSNWF are needed in order to achieve near full-rank MMSE performance over a practical range of SNR's.

Figures 5(b) and 6(b) display similar plots, but for the "edge of cell" scenario corresponding to soft hand-off. Here we effect 4 channels at the receiver by sampling the received signal at twice the chip-rate at each antenna. The dimension of the full space is 228 which makes full rank processing quite cumbersome. Amazingly, the MSE for MSNWF still goes down very steeply with rank and achieves the full-rank value for a subspace dimension of only 8 or so. In the BER plots of Figure 6(b), the bit error is calculated for the "soft handoff" mode. With perfect channel estimation, the MSNWF can achieve uncoded BER's similar to the full-rank MMSE over a practical SNR range after stopping at stage as low as 5!

These plots suggest that MSNWF can achieve rapid adaptation in the case where the chip-level MMSE equalizer is adapted based on a pilot channel. Figure 7 plots the output SINR for different chip-level equalizers vs. time in symbols, at a fixed SNR. The MSNWF at stages 5 and 10 yields very good performance with low sample-support. The convergence rate is significantly better than that of full-rank RLS which even asymptotically does not beat the MSNWF of rank only 10! The LMS algorithm converges much more slowly. For the two base-station case, the asymptotic SINR is lower for all the equalizers due to the added

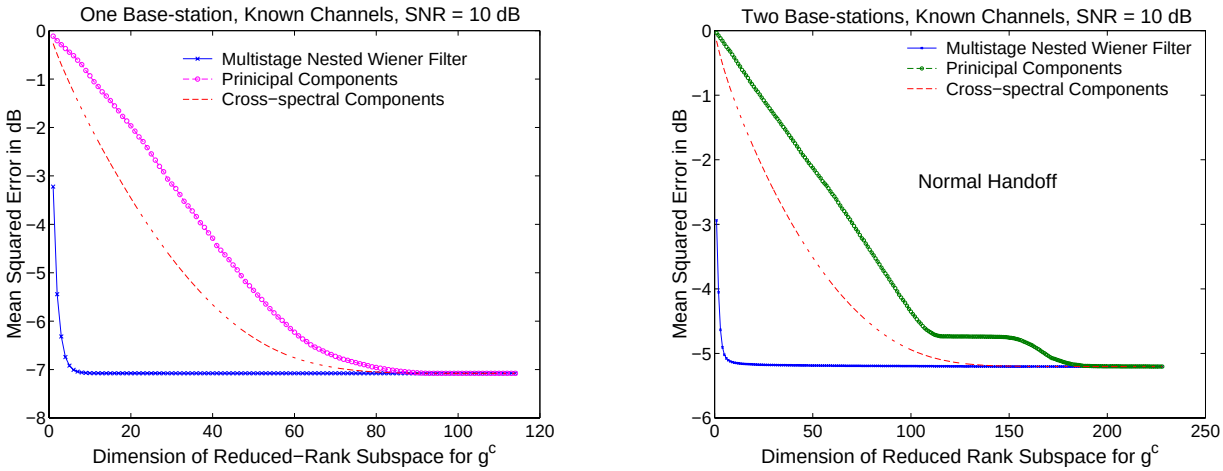

Figure 5: MSE vs Rank of Reduced Dimension Subspace

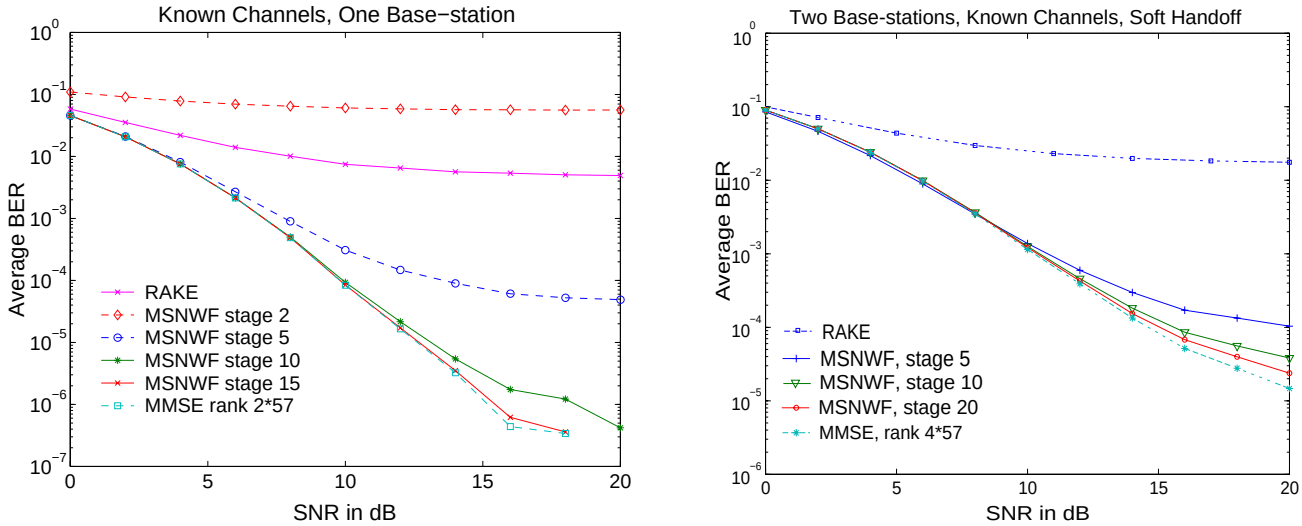

Figure 6: BER for Different Chip-level Equalizers for CDMA Downlink.

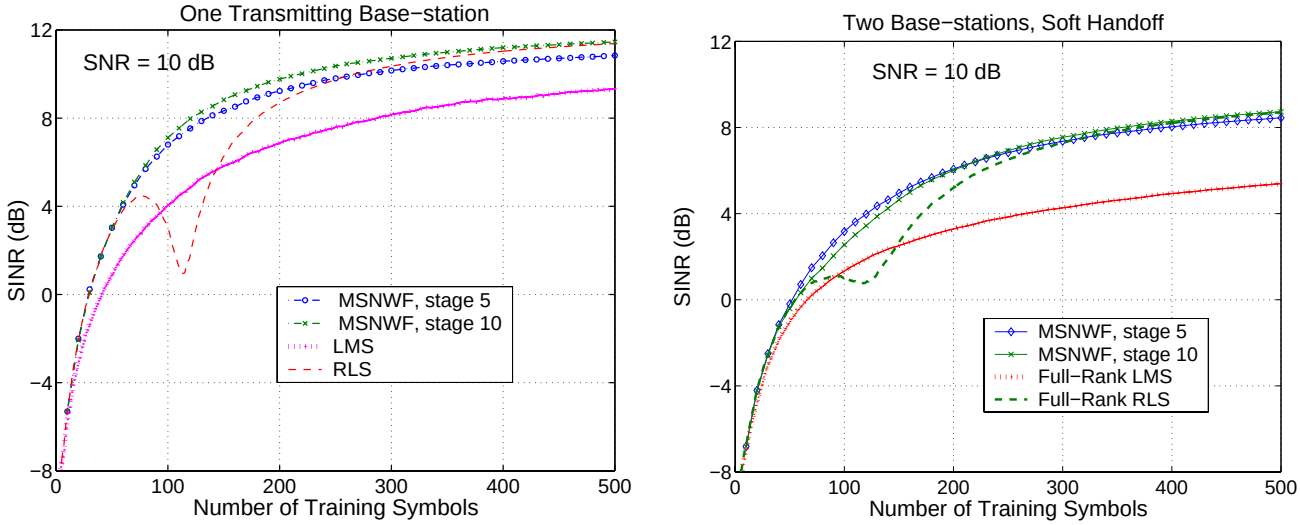

Figure 7: Output SINR vs Time for Adaptive Chip-level Equalizers for CDMA downlink.

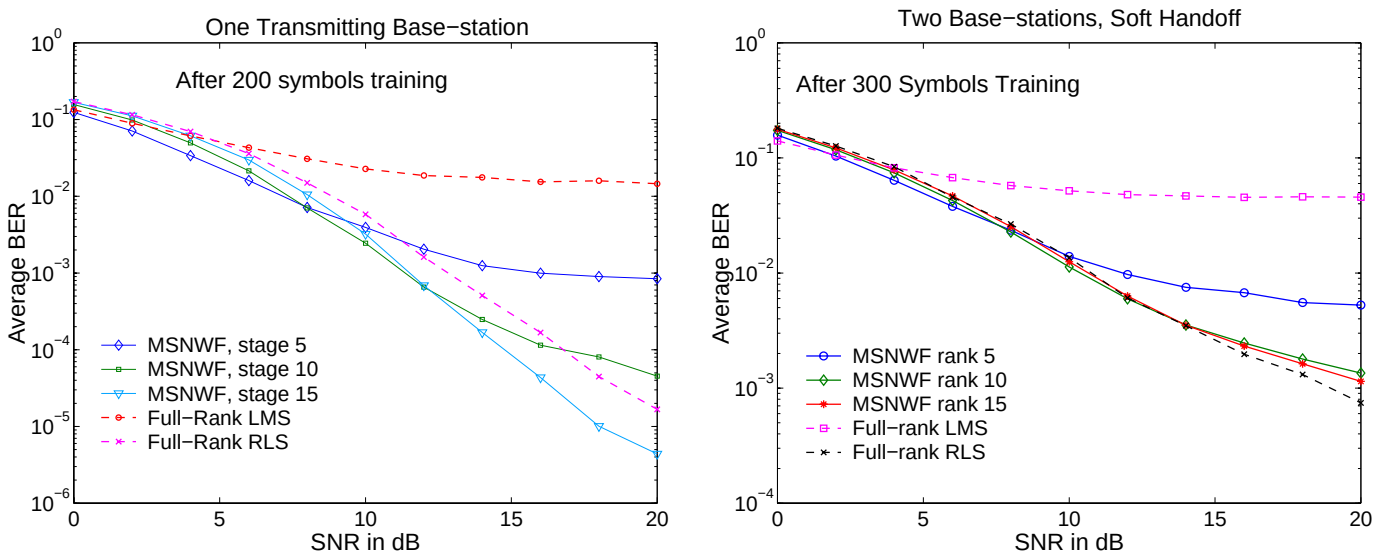

Figure 8: BER for Adaptive Chip-level Equalizers for CDMA Downlink.

interference from the MAI of the 2nd base-station. But the convergence speed of the low-rank MSNWF is still impressive. The BER curves in Figure 8 illustrate the performance of these equalizers. Note that graphs presented plot uncoded BER. In practice, the target uncoded BER is somewhere between 10^{-1} and 10^{-2}. Figure 8 (a) reveals that for uncoded BER's in this range, the stage 5 MSNWF performs better than the stage 10 or stage 15 MSNWF, as well as better than full-rank RLS! This improvement comes with dramatically lower computational complexity than RLS. The LMS algorithm is simpler, but performs extremely poor with slow convergence.

5 Overview II: Recent fundamental advances on MSNWF by PI.

Recall that the chain of nested Weiner Filters in Figure 3 may be replaced by the simple filter bank in Figure 4, where the N length filters $\mathbf{t}_i$ are computed in terms of the matched filters $\mathbf{h}_i$'s and the blocking matrices $\mathbf{B}_i$'s in Figure 3 according to Equation (14). We here show that we can compute exactly the same set of orthonormal filters $\mathbf{t}_i$ **without having to form the blocking matrices!** Adding the i-th stage we obtain the additional output signal $d_i[n] = \mathbf{t}_i^H \mathbf{x}_0[n]$ which is required to be maximally correlated with the output signal of the previous stage $d_{i-1}[n] = \mathbf{t}_{i-1}^H \mathbf{x}_0[n]$. Together with the orthogonality conditions this leads to following optimization problem:

$$\mathbf{t}_i = \arg\max_{\mathbf{t}} \mathcal{E}\{\mathrm{R}eal(d_i[n]d_{i-1}^*[n])\} \quad = \arg\max_{\mathbf{t}} \frac{1}{2}(\mathbf{t}^H \mathbf{R}_{\mathbf{x_0}} \mathbf{t}_{i-1} + \mathbf{t}_{i-1}^H \mathbf{R}_{\mathbf{x_0}} \mathbf{t}) \tag{16}$$

$$\text{s.t.:} \quad \mathbf{t}^H \mathbf{t} = 1 \quad \text{and} \quad \mathbf{t}^H \mathbf{t}_k = 0, k = 1, \ldots, i-1. \tag{17}$$

The solution, which is easily determined via the use of Lagrange multipliers, for example, is

$$\mathbf{t}_i = \frac{\left(\prod_{k=i-1}^{1} \mathbf{P}_k\right) \mathbf{R}_{\mathbf{x_0}} \mathbf{t}_{i-1}}{\| \left(\prod_{k=i-1}^{1} \mathbf{P}_k\right) \mathbf{R}_{\mathbf{x_0}} \mathbf{t}_{i-1} \|_2}, \quad \text{where:} \quad \mathbf{P}_i = \mathbf{I}_N - \mathbf{t}_i \mathbf{t}_i^H \tag{18}$$

$\mathbf{P}_i$ is the unique projection operator onto the orthogonal complement of the 1-D space spanned $\mathbf{t}_i$. We now show that it is not necessary to actually form $\mathbf{P}_i$! The key observation is that the recursion in Equation (18) is the Gram-Schmidt *Arnoldi algorithm* [Arn51, Saa96] for computing an orthonormal basis for the Krylov subspace $\mathbf{C}K^{(D)}$ generated by the square matrix $\mathbf{A} \in \mathbf{C}^{M \times M}$ and the column vector $\mathbf{b} \in \mathbf{C}^M$: $\mathbf{C}K^{(D)} = \text{span}\left([\mathbf{b}, \mathbf{A}\mathbf{b}, \ldots, \mathbf{A}^{D-1}\mathbf{b}]\right)$ [Saa96, vdV00]. Recall that Honig and Xiao [HX99] proved that with $\mathbf{B}_i = \mathbf{P}_i$ the filters $\mathbf{t}_i$ are an orthonormal basis for the Krylov subspace generated by $(\mathbf{R}_{\mathbf{x_0}}, \mathbf{r}_{\mathbf{x_0},\mathbf{d_0}})$.

The covariance matrix $\mathbf{R_d}$ of the pre-filtered observation $\mathbf{d}[n]$ (cf. Equation 15) is tri-diagonal. Coupled with the Hermitian property of $\mathbf{R_{x_0}}$, the orthogonal basis $\mathbf{t}_i$ of the Krylov subspace $\mathbf{C}K^{(D)}$ of $(\mathbf{R_{x_0}}, \mathbf{r_{x_0,d_0}})$ can be alternatively computed using the *Lanczos algorithm* [Lan50, Lan52, Saa96]. The net result is that the forward recursion of the MSNWF may be executed without the need for forming blocking matrices. Each successive member of the forward recursion basis may be efficiently computed as follows. At the i-th stage, first compute

$$\mathbf{u}_i = \mathbf{R_{x_0}}\mathbf{t}_{i-1}; \tag{19}$$

the next basis vector for the forward recursion is then computed as

$$\mathbf{t}_i = \mathbf{u}_i - (\mathbf{t}_{i-1}^H\mathbf{u}_i)\mathbf{t}_{i-1} - (\mathbf{t}_{i-2}^H\mathbf{u}_i)\mathbf{t}_{i-2} \tag{20}$$

followed by scaling $\mathbf{t}_i$ to have unit norm. Thus, we have an algorithm for computing the exact same orthogonal basis as that generated by the forward recursion in the original algorithmic structure of the MSNWF depicted in Figure 3, but which does not require blocking matrices!! This is a substantial computational savings. Another computation reducing feature of our innovation is the realization that after multiplying the previous member of the forward recursion basis by $\mathbf{R_{x_0}}$, we need only subtract off from the resulting vector its components onto *only* the last two members of the basis.

Note that Goldstein and Ricks [Ricks00] recently developed a data-level lattice structure for the MSNWF that also avoids the formation of blocking matrices. In contrast, we have developed a covariance-level filter bank structure for the MSNWF that does not require blocking matrices. Goldstein and Ricks' [Ricks00] algorithm requires a backwards recursion after the forward recursion is terminated. In contrast, in the next section, we develop an order-recursive form of the MSNWF through which the backwards recursion coefficients, and hence the weight vector, may be updated at each stage via a simple recursion.

5.1 Primary Contribution: Order-Recursive MSNWF

Recall that at stage D the orthogonal basis

$$\mathbf{T}^{(D)} = [\mathbf{t}_1, \ldots, \mathbf{t}_D] \in \mathbf{C}^{N\times D} \tag{21}$$

obtained through the forward recursion yields the length D observation

$$\mathbf{d}^{(D)}[n] = \mathbf{T}^{(D),H}\mathbf{x}_0[n] \in \mathbf{C}^D, \tag{22}$$

having the $D \times D$ tri-diagonal covariance matrix

$$\mathbf{R}_{\mathbf{d}}^{(D)} = \mathcal{E}\{\mathbf{d}^{(D)}[n]\mathbf{d}^{(D),H}[n]\} = \mathbf{T}^{(D),H}\mathbf{R_{x_0}}\mathbf{T}^{(D)}. \tag{23}$$

If we terminate at stage D, indicated by the superscript $(\bullet)^{(D)}$, the backwards recursion coefficients are the components of the Wiener filter $\mathbf{w}_{\mathbf{d}}^{(D)}$ which estimates $d_0[n]$ from $\mathbf{d}^{(D)}[n]$:

$$\mathbf{w}_{\mathbf{d}}^{(D)} = \left(\mathbf{R}_{\mathbf{d}}^{(D)}\right)^{-1}\mathbf{r}_{\mathbf{d},\mathbf{d_0}}^{(D)} = \left(\mathbf{T}^{(D),H}\mathbf{R_{x_0}}\mathbf{T}^{(D)}\right)^{-1}\mathbf{T}^{(D),H}\mathbf{r_{x_0,d_0}} \tag{24}$$

The rank D MSNWF approximation of the Wiener filter is then

$$\mathbf{w}_0^{(D)} = \mathbf{T}^{(D)}\mathbf{w}_{\mathbf{d}}^{(D)} = \mathbf{T}^{(D)}\left(\mathbf{T}^{(D),H}\mathbf{R_{x_0}}\mathbf{T}^{(D)}\right)^{-1}\mathbf{T}^{(D),H}\mathbf{r_{x_0,d_0}}. \tag{25}$$

which yields the *mean squared error*

$$\mathrm{MSE}^{(D)} = \sigma_{d_0}^2 - \mathbf{r}_{\mathbf{x_0},\mathbf{d_0}}^H\mathbf{T}^{(D)}\left(\mathbf{T}^{(D),H}\mathbf{R_{x_0}}\mathbf{T}^{(D)}\right)^{-1}\mathbf{T}^{(D),H}\mathbf{r_{x_0,d_0}}. \tag{26}$$

The goal is to update both the backwards recursion coefficients $\mathbf{w}_{\mathbf{d}}^{(D)}$ (which change with each stage) and the $\mathrm{MSE}^{(D)}$ for stage D in terms of $\mathbf{w}_{\mathbf{d}}^{(D-1)}$ and $\mathrm{MSE}^{(D-1)}$ from the previous stage.

To do this, recall that the observation $\mathbf{d}^{(D)}[n] = \mathbf{T}^{(D),H}\mathbf{x}_0[n]$ has the tri-diagonal covariance matrix

$$\mathbf{R}_{\mathbf{d}}^{(D)} = \mathbf{T}^{(D),H}\mathbf{R_{x_0}}\mathbf{T}^{(D)} = \left[\begin{array}{cc|c} \multicolumn{2}{c|}{\mathbf{T}^{(D-1),H}\mathbf{R_{x_0}}\mathbf{T}^{(D-1)}} & \begin{matrix}\mathbf{0}\\ r_{D-1,D}\end{matrix} \\ \hline \mathbf{0}^T & r_{D-1,D}^* & r_{D,D} \end{array}\right] \in \mathbf{C}^{D\times D} \tag{27}$$

and the cross-correlation vector with respect to the desired signal $d_0[n]$

$$\mathbf{r}_{\mathbf{d},\mathbf{d_0}}^{(D)} = \mathbf{T}^{(D),H}\mathbf{r}_{\mathbf{x_0},\mathbf{d_0}} = \begin{bmatrix} \|\mathbf{r}_{\mathbf{x_0},\mathbf{d_0}}\|_2 \\ \mathbf{0} \end{bmatrix} \in \mathbf{r}^D. \tag{28}$$

Given $\mathbf{R}_{\mathbf{d}}^{(D-1)}$ from stage $D-1$, the new entries of $\mathbf{R}_{\mathbf{d}}^{(D)}$ are simply

$$r_{D-1,D} = \mathbf{t}_{D-1}^H \mathbf{R}_{\mathbf{x_0}} \mathbf{t}_D \quad \text{and} \quad r_{D,D} = \mathbf{t}_D^H \mathbf{R}_{\mathbf{x_0}} \mathbf{t}_D. \tag{29}$$

Because $\mathbf{r}_{\mathbf{d},\mathbf{d_0}}^{(D)}$ has the property that only the first element is not equal to 0, only the first column of the inverse of $\mathbf{R}_{\mathbf{d}}^{(D)}$ is needed to compute the backwards recursion coefficients via $\mathbf{w}_{\mathbf{d}}^{(D)} = \mathbf{R}_{\mathbf{d}}^{(D),-1}\mathbf{r}_{\mathbf{d},\mathbf{d_0}}^{(D)}$.

For the sake of notational simplicity, define

$$\mathbf{C}^{(D)} = \mathbf{R}_{\mathbf{d}}^{(D),-1} = [\mathbf{c}_1^{(D)}, \ldots, \mathbf{c}_D^{(D)}] \in \mathbf{C}^{D\times D}. \tag{30}$$

The backwards recursion coefficients for stage D, $\mathbf{w}_{\mathbf{d}}^{(D)}$, is then the first column, $\mathbf{c}_1^{(D)}$, of $\mathbf{C}^{(D)} = \mathbf{R}_{\mathbf{d}}^{(D),-1}$. The inversion lemma for partitioned matrices (e.g., [Sch91, MW95]) leads to

$$\mathbf{C}^{(D)} = \begin{bmatrix} \mathbf{C}^{(D-1)} & \mathbf{0} \\ \mathbf{0}^T & 0 \end{bmatrix} + \beta_D^{-1}\mathbf{b}^{(D)}\mathbf{b}^{(D),H}, \tag{31}$$

where the various quantities are defined as follows.

$$\mathbf{b}^{(D)} = \begin{bmatrix} -\mathbf{C}^{(D-1)} \begin{bmatrix} \mathbf{0} \\ r_{D-1,D} \end{bmatrix} \\ 1 \end{bmatrix} = \begin{bmatrix} -r_{D-1,D}\mathbf{c}_{D-1}^{(D-1)} \\ 1 \end{bmatrix} \in \mathbf{C}^D \tag{32}$$

and

$$\beta_D = r_{D,D} - [\mathbf{0}^T, r_{D-1,D}^*]\mathbf{C}^{(D-1)} \begin{bmatrix} \mathbf{0} \\ r_{D-1,D} \end{bmatrix} = r_{D,D} - |r_{D-1,D}|^2 c_{D-1,D-1}^{(D-1)} \tag{33}$$

with $c_{D-1,D-1}^{(D-1)}$ being the last element of the last column $\mathbf{c}_{D-1}^{(D-1)}$ of $\mathbf{C}^{(D)}$ at the previous step. Therefore, the first column $\mathbf{c}_1^{(D)}$ can be written in terms of the first column of $\mathbf{C}^{(D-1)}$ from stage $D-1$ as

$$\mathbf{c}_1^{(D)} = \begin{bmatrix} \mathbf{c}_1^{(D-1)} \\ 0 \end{bmatrix} + \beta_D^{-1} c_{1,D-1}^{(D-1),*} \begin{bmatrix} |r_{D-1,D}|^2 \mathbf{c}_{D-1}^{(D-1)} \\ -r_{D-1,D}^* \end{bmatrix} \in \mathbf{C}^D, \tag{34}$$

where $c_{1,D-1}^{(D-1)}$ denotes the first element of $\mathbf{c}_{D-1}^{(D-1)}$. Obviously, the first column of $\mathbf{C}^{(D)}$ and, thus, the Wiener filter $\mathbf{w}_{\mathbf{d}}^{(D)}$ at step D depends upon the first column $\mathbf{c}_1^{(D-1)}$ at step $D-1$ and the new entries of the covariance matrix $r_{D-1,D}$ and $r_{D,D}$. However, we also observe a dependency on the previous last column $\mathbf{c}_{D-1}^{(D-1)}$. Hence, we have to determine an expression for the last column of $\mathbf{C}^{(D)}$. Invoking Equation (31) we obtain

$$\mathbf{c}_D^{(D)} = \beta_D^{-1} \begin{bmatrix} -r_{D-1,D}\mathbf{c}_{D-1}^{(D-1)} \\ 1 \end{bmatrix} \tag{35}$$

which only depends on the previous last column and the new entries of $\mathbf{R}_{\mathbf{d}}^{(D)}$. So, we have developed an iteration that only updates two vectors $\mathbf{c}_1^{(D)}$ and $\mathbf{c}_D^{(D)}$ at each stage. In addition, the *mean squared error* at stage D can be updated via the first entry $c_{1,1}^{(D)}$ of $\mathbf{c}_1^{(D)}$ (cf. Equation 26):

$$\text{MSE}^{(D)} = \sigma_{d_0}^2 - \|\mathbf{r}_{\mathbf{x_0},\mathbf{d_0}}\|_2^2 c_{1,1}^{(D)}. \tag{36}$$

The resulting "covariance level" version of the new (proposed) order-recursive MSNWF is summarized in Table 1, where we substituted $\mathbf{c}_1^{(i)}$ and $\mathbf{c}_i^{(i)}$ by $\mathbf{c}_{\text{first}}^{(i)}$ and $\mathbf{c}_{\text{last}}^{(i)}$, respectively.

$\mathbf{t}_0 = \mathbf{0}, \quad \mathbf{t}_1 = \mathbf{r}_{\mathbf{x_0},\mathbf{d_0}}/\|\mathbf{r}_{\mathbf{x_0},\mathbf{d_0}}\|_2$
$\mathbf{u} = \mathbf{R}_{\mathbf{x_0}}\mathbf{t}_1$
$r_{0,1} = 0, \quad r_{1,1} = \mathbf{t}_1^H\mathbf{u}$
$c_{\text{first}}^{(1)} = r_{1,1}^{-1}, \quad c_{\text{last}}^{(1)} = r_{1,1}^{-1}$
$\text{MSE}^{(1)} = \sigma_{d_0}^2 - \|\mathbf{r}_{\mathbf{x_0},\mathbf{d_0}}\|_2^2 c_{\text{first}}^{(1)}$
for $i = 2, \ldots, D$
$\quad \mathbf{v} = \mathbf{u} - r_{i-1,i-1}\mathbf{t}_{i-1} - r_{i-2,i-1}\mathbf{t}_{i-2}$
$\quad r_{i-1,i} = \|\mathbf{v}\|_2$
$\quad \mathbf{t}_i = \mathbf{v}/r_{i-1,i}$
$\quad \mathbf{u} = \mathbf{R}_{\mathbf{x_0}}\mathbf{t}_i$
$\quad r_{i,i} = \mathbf{t}_i^H\mathbf{u}$
$\quad \beta_i = r_{i,i} - \lvert r_{i-1,i}\rvert^2 c_{\text{last},i-1}^{(i-1)}$
$\quad \mathbf{c}_{\text{first}}^{(i)} = \begin{bmatrix} \mathbf{c}_{\text{first}}^{(i-1)} \\ 0 \end{bmatrix} + \beta_i^{-1} c_{\text{last},1}^{(i-1),*} \begin{bmatrix} \lvert r_{i-1,i}\rvert^2 \mathbf{c}_{\text{last}}^{(i-1)} \\ -r_{i-1,i}^* \end{bmatrix}$
$\quad \mathbf{c}_{\text{last}}^{(i)} = \beta_i^{-1} \begin{bmatrix} -r_{i-1,i}\mathbf{c}_{\text{last}}^{(i-1)} \\ 1 \end{bmatrix}$
$\quad \text{MSE}^{(i)} = \sigma_{d_0}^2 - \|\mathbf{r}_{\mathbf{x_0},\mathbf{d_0}}\|_2^2 c_{\text{first},1}^{(i)}$
$\mathbf{T}^{(D)} = [\mathbf{t}_1, \ldots, \mathbf{t}_D]$
$\mathbf{w}_0^{(D)} = \mathbf{T}^{(D)}\mathbf{c}_{\text{first}}^{(D)}$

Table 1. Covariance-Level Order-Recursive MSNWF.

Forward Recursion:
for $i = 1, ..., D$
$\quad \mathbf{t}_i = \sum_{n=0}^{M-1} d_{i-1}^*[n]\mathbf{x}_{i-1}[n], \quad \mathbf{t}_i = \mathbf{t}_i/\|\mathbf{t}_i\|_2$
$\quad d_i[n] = \mathbf{t}_i^H\mathbf{x}_{i-1}[n], \;\; n = 0, .., , M-1$
$\quad \mathbf{x}_i[n] = \mathbf{x}_{i-1}[n] - d_i[n]\mathbf{t}_i, \;\; n = 0, .., , M-1$
$\epsilon_D[n] = d_D[n]$
Backwards Recursion:
for $i = (D-1), ..., 1$
$\quad w_{i+1} = \left\{\sum_{n=0}^{M-1} d_i[n]\epsilon_{i+1}^*[n]\right\} / \left\{\sum_{n=0}^{M-1} \lvert\epsilon_{i+1}[n]\rvert^2\right\}$
$\quad \epsilon_i[n] = d_i[n] - w_{i+1}\epsilon_{i+1}[n], \;\; n = 0, .., , M-1$
$\mathbf{w}_0^{(D)} = \sum_{i=1}^{D}(-1)^{i+1}\left\{\prod_{\ell=1}^{i} w_i\right\}\mathbf{h}_i$

Table 2. Data-Level Lattice MSNWF. (not order-recursive)

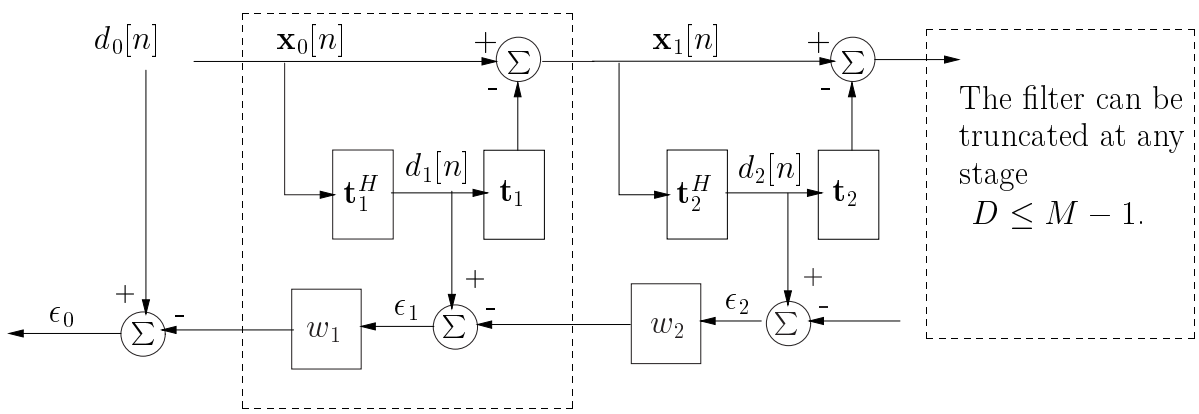

Figure 9: Lattice structure for MSNWF; dashed box is basic module for each additional stage.

6 Development for Selected Research Goals Listed in Section 1.

Data-Level Order-Recursive MSNWF. The proposed order-recursive MSNWF summarized in Table 1 works at the covariance level, thereby presuming formation of a sample covariance matrix. We propose to develop data level versions of the order-recursive MSNWF amenable to the modular/lattice structure of the MSNWF recently developed by Goldstein and Ricks [Ricks00] and depicted in Figure 9. The algorithm accompanying Figure 9 is delineated in Table 2 and entails block-oriented processing: a block of data is extracted from the overall data stream and broken up into M blocks of length N denoted $\mathbf{x}[n]$, $n = 0, 1, ..., M-1$. The M data blocks may or may not be overlapping depending on the application.

Similar to our forward recursion based on Krylov subspace estimation, the Goldstein/Ricks algorithm in Table 2 does not require blocking matrices but it still requires a backwards-recursion once the forward recursion is terminated. We thus propose a data-level, order-recursive MSNWF: a single do-loop consisting of (in order) (I) the first three lines of the forward recursion do-loop in Table 2 (compute $\mathbf{t}_i$, $d_i[n]$, and $\mathbf{x}_i[n]$ at i-th stage), (II) compute $r_{i-1,i} = \sum_{n=0}^{M-1} d_{i-1}^*[n]d_i[n]$ and $r_{i,i} = \sum_{n=0}^{M-1} \lvert d_i[n]\rvert^2$, and (III) the last

four lines of the do-loop in Table 1 (compute β_i, $\mathbf{c}_{\text{first}}^{(i)}$, $\mathbf{c}_{\text{last}}^{(i)}$, and $\text{MSE}^{(i)}$ at i-th stage). The quantities $r_{i-1,i}$ and $r_{i,i}$ are the new entries introduced into the tri-diagonal covariance matrix at stage i: $r_{i-1,i} = \mathbf{t}_{i-1}^H \mathbf{R}_{\mathbf{x_0}} \mathbf{t}_i$ and $r_{i,i} = \mathbf{t}_i^H \mathbf{R}_{\mathbf{x_0}} \mathbf{t}_i$ (cf Eqn (29)), but expressed alternatively in terms of $d_i[n]$ and $d_{i-1}[n]$, quantites produced in the execution of the lattice MSNWF depicted in Figure 9. The proposed data-level, order-recursive MSNWF has all the desired benefits: (i) order-recursive thereby updating the backwards recursion coefficients and MSE at each stage, (ii) avoids computation of blocking matrices, and (iii) avoids computation of a covariance matrix (for which there may not be sufficient sample support.)

Connection to Gradient Search (CG) Techniques. Substituting the expression for $\mathbf{c}_{\text{first}}^{(i)}$ in Table 1 into $\mathbf{w}_0^{(i)} = \mathbf{T}^{(i)} \mathbf{c}_{\text{first}}^{(i)}$. where $\mathbf{T}^{(i)} = [\mathbf{t}_1, \ldots, \mathbf{t}_i]$, yields a stage to stage direct update of the weight vector

$$\mathbf{w}_0^{(i)} = \mathbf{w}_0^{(i-1)} + \gamma_i \mathbf{g}_i + \phi_i \mathbf{t}_i, \qquad \text{where: } \mathbf{g}_i = \mathbf{T}^{(i)} \mathbf{c}_{\text{last}}^{(i)} = \eta_i \mathbf{g}_{i-1} + \zeta_i \mathbf{t}_i \tag{37}$$

where γ_i, ϕ_i, η_i, and ζ_i are all scalars whose expressions are not provided here due to space limitations. As discussed previously, the connection between CG and MSNWF is that at each iteration CG minimizes $\mathbf{w}^H \mathbf{R}_{\mathbf{x_0}} \mathbf{w} + \mathbf{w}^H \mathbf{r}_{\mathbf{x_0},\mathbf{d_0}} + \mathbf{r}_{\mathbf{x_0},\mathbf{d_0}}^H \mathbf{w}$ in the Krylov subspace generated by $\mathbf{R}_{\mathbf{x_0}}$ and $\mathbf{r}_{\mathbf{x_0},\mathbf{d_0}}$. An analysis of the direct MSNWF weight update in (37) will allow us to assess the equivalence between MSNWF and CG.

Incorporating Multiple Constraints into the MSNWF We propose to incorporate multiple constraints into the MSNWF, for both the covariance level and data level versions of the MSNWF. A classic example of where multiple constraints may arise is in robust beamforming. In addition to a unity gain constraint in the desired look direction, a zero derivative constraint at the look direction is often imposed to reduce sensitivity to mismatch between the "look" direction and the actual arrival angle of the desired source. The incorporation of multiple constraints into the MSNWF has heretofore not yet been developed.

We propose to develop MSNWF based solutions for Minimum Variance problems of the form

$$\begin{aligned} \mathbf{w} &= \arg\min_{\mathbf{w}} \mathbf{w}^H \mathbf{R}_{\mathbf{x_0}} \mathbf{w} \\ \text{s.t.:} \quad & \mathbf{C}^H \mathbf{w} = \boldsymbol{\delta} \end{aligned} \tag{38}$$

with multiple constraints incorporated in the form of a constraint matrix equation $\mathbf{C}^H \mathbf{w} = \boldsymbol{\delta}$. The closed-form solution to (38) may be expressed as

$$\mathbf{w} = \mathbf{A}\boldsymbol{\beta} + \mathbf{C}(\mathbf{C}^H \mathbf{C})^{-1} \boldsymbol{\delta} \;=\; \mathbf{A}\boldsymbol{\beta} + \boldsymbol{\gamma} \tag{39}$$

where $\boldsymbol{\gamma} = \mathbf{C}(\mathbf{C}^H \mathbf{C})^{-1} \boldsymbol{\delta}$ and $\mathbf{C}^H \mathbf{A} = \mathbf{O}$, i. e., the column space of $\mathbf{A}$ spans the orthogonal complement of the column space of $\mathbf{C}$. This leads to the unconstrained optimization problem

$$\boldsymbol{\beta} = \arg\min_{\boldsymbol{\beta}} \boldsymbol{\beta}^H \mathbf{A}^H \mathbf{R}_{\mathbf{x_0}} \mathbf{A} \boldsymbol{\beta} + \boldsymbol{\beta}^H \mathbf{A}^H \mathbf{R}_{\mathbf{x_0}} \boldsymbol{\gamma} + \boldsymbol{\gamma}^H \mathbf{R}_{\mathbf{x_0}} \mathbf{A} \boldsymbol{\beta} + \boldsymbol{\gamma}^H \mathbf{R}_{\mathbf{x_0}} \boldsymbol{\gamma} \tag{40}$$

The optimal $\boldsymbol{\beta}$ may be computed as the solution to the Wiener-Hopf Eqns $\{\mathbf{A}^H \mathbf{R}_{\mathbf{x_0}} \mathbf{A}\} \boldsymbol{\beta} = -\mathbf{A}^H \mathbf{R}_{\mathbf{x_0}} \boldsymbol{\gamma}$. It is apparent that one may to solve for $\boldsymbol{\beta}$ via the efficient, covariance level version of the MSNWF summarized in Table 1 by replacing $\mathbf{R}_{\mathbf{x_0}}$ by $\mathbf{A}^H \mathbf{R}_{\mathbf{x_0},\mathbf{d_0}} \mathbf{A}$ and $\mathbf{r}_{\mathbf{x_0},\mathbf{d_0}}$ by $-\mathbf{A}^H \mathbf{R}_{\mathbf{x_0},\mathbf{d_0}} \boldsymbol{\gamma}$. The reduced-rank solution for $\boldsymbol{\beta}$ thus obtained is then substituted into (39).

A data-level, modular/lattice form of the MSNWF incorporating multiple constraints is facilitated by substituting $\hat{\mathbf{R}}_{\mathbf{x_0}} = \frac{1}{M} \sum_{n=0}^{M} \mathbf{x}[n] \mathbf{x}^H[n]$ into $\mathbf{A}^H \mathbf{R}_{\mathbf{x_0},\mathbf{d_0}} \mathbf{A}$ and $\mathbf{A}^H \mathbf{R}_{\mathbf{x_0},\mathbf{d_0}}$. The net result is that the structure in Figure 9, governed by the algorithm outlined in Table 2, may be employed by replacing the input data blocks $\mathbf{x}_0[n]$ by $\mathbf{x}_{0,r}[n] = \mathbf{A}^H \mathbf{x}[n]$, $n = 0, 1, ..., M-1$, and replacing the first basis vector for the forward recursion, $\mathbf{t}_1$, by $\mathbf{t}_1 = \sum_{n=0}^{M} (\mathbf{A}^H \mathbf{x}[n])(\mathbf{x}^H[n] \boldsymbol{\gamma})$ (followed by normalizing $\mathbf{t}_1$ to have unit length).

We will analyze the performance of these proposed schemes. In addition, we will investigate additional methodologies for efficiently incorporating multiple constraints into the MSNWF based on the following alternative form of the solution to (38), for example: $\mathbf{w_0} = \mathbf{R}_{\mathbf{x_0}}^{-1} \mathbf{A} (\mathbf{A}^H \mathbf{R}_{\mathbf{x_0}} \mathbf{A})^{-1} \boldsymbol{\delta}$.

7 Results from Prior NSF Support

As delineated below, research conducted with the support of prior NSF grants has been honored with three major paper awards. Due to space limitations, we only discuss results from recent NSF grants. However, we note that the first paper award, **IEEE Signal Processing Society's 1991 Young Author Award**

(Statistical Signal and Array Processing Technical Area) honored research supported by a National Science Foundation Research Initiation Award, Grant Number ECS-8707681, 1 Aug. 1987- 31 Jan. 1990.

Space-Time Processing for Digital Communications: Nonparametric Channel Identification, Interference Cancellation and Multichannel Equalizer Design Based on Linear Matrix Inequalities
GRANT NUMBER: MIP-9708309, DURATION OF AWARD: 1 August 1997 - 31 July 2000.
PRINCIPAL INVESTIGATORS: M. Zoltowski & V. Balakrishnan, PROGRAM DIRECTOR: Dr. John Cozzens, SPS

The research supported by this grant lead to 19 journal publications [1, 2, 3, 4, 5, 6, 7, 8, 9, 10, 11, 12, 13, 14, 15, 16, 17, 18, 19] and over 50 conference papers (only a subset of the conference papers are cited below.) In addition, the PI was honored as a *Fellow of IEEE*, effective 1 January 1999 for "Contributions to the theory of antenna array signal processing and two-dimensional direction-of-arrival estimation".

Chip-Level Equalization for Forward Link High-Speed CDMA. We developed a novel "chip-level" equalizer for a high-speed CDMA forward link under frequency selective multipath conditions. The idea is to first effect "chip-level" equalization to restore the synchronous multi-user signal transmitted from the base-station at the chip-rate. This allows us to then exploit the orthogonality of the Walsh-Hadamard sequences by correlating with the product of the desired user's channel code times the base-station specific scrambling code once per symbol to decode the symbols. We compare MMSE and Zero Forcing (ZF) based estimators to the traditional RAKE receiver. Our formulation generalizes for the multi-channel case as might be derived from multiple antennas and/or over-sampling with respect to the chip-rate. The optimal symbol-level MMSE equalizer was derived and shown to slightly out-perform the chip-level equalizer but at a greater computational cost. An MMSE soft hand-off receiver was also developed and analyzed which uses soft hand-off mode to achieve diversity gains. Average BER for a class of multi-path channels was assessed under varying operating conditions of single-cell and edge-of-cell, coded and un-coded BPSK data symbols, and uncoded 16-QAM. These simulations indicate large performance gains compared to the RAKE receiver, especially when the cell is fully loaded with users. Analytical expressions were developed for predicting the performance of chip-level equalizers (based on either MMSE, ZF, or RAKE receiver) and were shown to highly accurate. This research won a **Best Paper Award at IEEE International Symposium on Spread Spectrum Techniques & Applications 2000.** [27]. See also [20, 22, 23, 24, 25, 26].

Popular Press Coverage. This research was also reported in numerous articles in the popular press. An ABCnews.com article was posted at http://abcnews.go.com/sections/tech/cuttingedge/cuttingedge000505.html. An LA Times article by popular science writer Lee Dye appeared on June 26. An article also appeared in the Sept./Oct. issue of Technology Review, "MIT's Magazine of Innovation"; this work was featured on pg. 23 as part of a column entitled "PROTOTYPE". An article also appeared in the July 10 issue of The Chicago Tribune: in Section 4 Business.Technology in a column entitled "Inside Technology" by Jon Van. Articles on this research have also appeared in Mobile Computing Magazine, Wired News, WirelessEurope, New Scientist, Advanced Transportation Technology News, UPI, and Scientific American.

Blind Multichannel Identification for High-Speed TDMA. Blind channel ID for large delay spreads was developed along with attendant space-time equalization, based on subbanding and the Cross-Relation Method (CRM) developed by Liu, Xu, Tong, and Kailath. The CRM is applied in each subband, using basis functions derived from the symbol waveform and the bandpass filter, to blindly identify the frequency response of each channel over that subband. Space-time ZF equalization is then performed across the two antennas on a per subband basis. A method was developed for proper phasing of each blind subband channel estimate to reconstruct the full channel impulse response. This research won the **Best Unclassified Paper Award at IEEE Milcom '98** [32]. See also [30, 31, 32, 33, 34, 35, 36].

Novel Processing of a Short Training Sequence. At each antenna, the received burst is cross-correlated with an extended correlator synthesized from a number of sequence values greater than the number of training symbols, e.g., by a factor of 3, and not constrained to be members of the symbol alphabet so that its cross-correlation with the training sequence well approximates a Kronecker delta function. The high degree of time-localization of the desired user's contribution facilitates the simple formation of interference canceling beams with mainlobes encompassing the angular spread of the desired user's multipath. Exploiting both the spatial gain against noise achieved through this training assisted beamforming, as well as the temporal gain against noise achieved by effectively adding the training symbols in phase, we developed schemes for estimating the impulse response of each beam channel via a small-order system of linear equations constructed from samples extracted from the center of the extended correlator output for each beam. Various portions of this work were presented in [37, 38, 39, 40, 41, 42]

References

[AC76] S. P. Applebaum and D. J. Chapman. Adaptive Arrays with Main Beam Constraints. *IEEE Transactions on Antennas and Propagation*, 24(5), September 1976.

[Arn51] W. E. Arnoldi. The Principle of Minimized Iterations in the Solution of the Matrix Eigenvalue Problem. *Quarterly of Applied Mathematics*, 9(1):17–29, January 1951.

[BR89] K. A. Byerly and R. A. Roberts. Output Power Based Partial Adaptive Array Design. In *Proc. 23rd Asilomar Conference on Signals, Systems & Computers*, volume 2, pages 576–580, October 1989.

[EY36] C. Eckart and G. Young. The Approximation of One Matrix by Another of Lower Rank. *Psychometrika*, 1(3):211–218, September 1936.

[GGDR98] J. S. Goldstein, J. R. Guerci, D. E. Dudgeon, and I. S. Reed. Theory of Signal Representation. submitted to *IEEE Transactions on Signal Processing*, 1998.

[GGR99] J. S. Goldstein, J. R. Guerci, and I. S. Reed. An Optimal Generalized Theory of Signal Representation. In *Proc. ICASSP'99*, volume 3, pages 1357–1360, March 1999.

[GJ82] L. J. Griffiths and C. W. Jim. An Alternative Approach to Linearly Constrained Adaptive Beamforming. *IEEE Transactions on Antennas and Propagation*, 30(1), January 1982.

[GR97a] J. S. Goldstein and I. S. Reed. A New Method of Wiener Filtering and its Application to Interference Mitigation for Communications. In *Proc. MILCOM 1997*, volume 3, pages 1087–1091, November 1997.

[GR97b] J. S. Goldstein and I. S. Reed. Subspace Selection for Partially Adaptive Sensor Array Processing. *IEEE Transactions on Aerospace and Electronic Systems*, 33(2):539–543, April 1997.

[GRS98] J. S. Goldstein, I. S. Reed, and L. L. Scharf. A Multistage Representation of the Wiener Filter Based on Orthogonal Projections. *IEEE Transactions on Information Theory*, 44(7):2943–2959, November 1998.

[GRZ99] J. S. Goldstein, I. S. Reed, and P. A. Zulch. Multistage Partially Adaptive STAP CFAR Detection Algorithm. *IEEE Transactions on Aerospace and Electronic Systems*, 35(2):645–661, April 1999.

[HG00] M. L. Honig and J. S. Goldstein. Adaptive Reduced-Rank Interference Suppression Based on the Multistage Wiener Filter. submitted to *IEEE Transactions on Communications*, March 2000.

[Hot33] H. Hotelling. Analysis of a Complex of Statistical Variables into Principal Components. *Journal of Educational Psychology*, 24(6/7):417–441, 498–520, September/October 1933.

[HS52] M. R. Hestenes and E. Stiefel. Methods of Conjugate Gradients for Solving Linear Systems. *Journal of Research of the National Bureau of Standards*, 49(6):409–436, December 1952.

[HX99] M. L. Honig and W. Xiao. Performance of Reduced-Rank Linear Interference Suppression for DS-CDMA. submitted to *IEEE Transactions on Information Theory*, December 1999.

[KBP98] A. Kansal, S. N. Batalama, and D. A. Pados. Adaptive Maximum SINR RAKE Filtering for DS-CDMA Multipath Fading Channels. *IEEE Journal on Selected Areas in Communications*, 16(9), December 1998.

[Lan50] C. Lanczos. An Iteration Method for the Solution of the Eigenvalue Problem of Linear Differential and Integral Operators. *Journal of Research of the National Bureau of Standards*, 45(4):255–282, October 1950.

[Lan52] C. Lanczos. Solution of Systems of Linear Equations by Minimized Iterations. *Journal of Research of the National Bureau of Standards*, 49(1):33–53, July 1952.

[LUN99] P. Li, W. Utschick, and J. A. Nossek. A New DS-CDMA Interference Cancellation Scheme for Space-Time rake Processing. In *Proc. European Wireless 99 & ITG Mobile Communications*, pages 385–389, October 1999.

[MW95] R. N. McDonough and A. D. Whalen. *Detection of Signals in Noise.* Academic Press, 1995.

[PB99] D. A. Pados and S. N. Batlama. Joint Space-Time Auxiliary-Vector Filtering for DS/CDMA Systems with Antenna Arrays. *IEEE Transactions on Communications*, 47(9), September 1999.

[PLB99] D. A. Pados, F. J. Lombardo, and S. N. Batalama. Auxiliary-Vector Filters and Adaptive Steering for DS/CDMA Single-User Detection. *IEEE Transactions on Vehicular Technology*, 48(6), November 1999.

[Saa96] Y. Saad. *Iterative Methods for Sparse Linear Systems.* PWS – *out of print*, 1996. http://www-users.cs.umn.edu/ saad/books.html.

[Sch91] L. L. Scharf. *Statistical Signal Processing.* Addison-Wesley, 1991.

[SW99] M. K. Schneider and A. S. Willsky. Krylov Subspace Estimation. submitted to *SIAM Journal on Scientific Computing*, June 1999.

[vdV00] H. A. van der Vorst. Krylov Subspace Iteration. *Computing in Science & Engineering*, 2(1):32–37, January/February 2000.

[Zol00aa] Wilbur Myrick and M. D. Zoltowski, "Exploiting Conjugate Symmetry in Power Minimization Based Pre-Processing for GPS: Reduced Complexity and Smoothness," *Proc. of 2000 IEEE Int'l Conf. on Acoustics, Speech, and Signal Processing*, Istanbul, Turkey, vol. V, pp. 2833-2836, 5-9 June 2000.

[Zol00a] Wilbur Myrick and M. D. Zoltowski, "GPS Jammer Suppression with Low-Sample Support Using Reduced-Rank Power Minimization," *Proc. of the 10th IEEE Workshop on Statistical Signal and Array Processing, SSAP 2000,* Pocono Manor, PA, 14-16 August 2000, pp. 514-518.

[Zol00b] Wilbur Myrick and Michael D. Zoltowski, "Low-Sample Performance of Reduced-Rank Power Minimization Based Jammer Suppression for GPS," *IEEE Sixth International Symposium on Spread Spectrum Techniques & Applications (ISSSTA 2000)*, Parsippany, NJ, 6-8 September 2000, pp. 93-97.

[Zol00c] W.L. Myrick, M.D. Zoltowski, and J.S. Goldstein, "Adaptive Anti-Jam Reduced-Rank Space-Time Preprocessor Algorithms for GPS," *Institute of Navigation (ION) Conference,* Salt Lake City, Utah, 17-20 Sept. 2000.

[Zol00d] Samina Chowdhury, Michael D. Zoltowski, and Scott Goldstein, "Reduced-Rank Adaptive MMSE Equalization for the Forward Link in High-Speed CDMA," *invited paper*, *43rd IEEE Midwest Symposium on Circuits and Systems*, East Lansing, MI, 8-11 August 2000.

[Zol00e] Samina Chowdhury, Michael D. Zoltowski, and Scott Goldstein, "Reduced-Rank Adaptive MMSE Equalization for the Forward Link in High-Speed CDMA," *invited paper*, *43rd IEEE Midwest Symposium on Circuits and Systems*, East Lansing, MI, 8-11 August 2000.

[Zol00f] Samina Chowdhury, Michael D. Zoltowski, and J. Scott Goldstein, "Application of Reduced-Rank Chip-Level MMSE Equalization to Forward Link DS-CDMA with Frequency Selective Multipath," *Proceedings 38th Annual Allerton Conference on Communications, Systems, and Computing,* 4-6 Oct. 2000.

[Zol00g] Michael D. Zoltowski, Samina Chowdhury, and J. Scott Goldstein, "Reduced-Rank Adaptive MMSE Equalization for High-Speed CDMA Forward Link with Sparse Multipath Channels," *Conf. Record of the 34th Asilomar IEEE Conference on Signals, Systems, and Computers,* 29 Oct. - Nov. 1, 2000.

[Zol00h] H.E. Witzgall, J.S. Goldstein and M.D. Zoltowski, "A non-unitary extension to spectral estimation," accepted for *The Ninth IEEE Digital Signal Processing Workshop* Hunt, Texas, October 15-18, 2000.

[Zol00i] H.Witzgall, J.S.Goldstein, M.Zoltowski, S.Huang and I.S.Reed, "ROCK MUSIC: A Reduced Order Correlation Kernal extension of the MUSIC algorithm," *invited paper*, *Conf. Record of the 34th Asilomar IEEE Conference on Signals, Systems, and Computers,* 29 Oct. - Nov. 1, 2000.

[Ricks00] D. Ricks and J.S.Goldstein, "Efficient Implementation of Multi-Stage Adaptive Weiner Filters," *Antenna Applications Symposium,* Allerton Park, Illinois, 20-22 Sept. 2000.

[Joh00a] M. Joham and M.D. Zoltowski, "Interpretation of the Multi-Stage Nested Weiner Filter in the Krylov Subspace Framework," *Technical Report TR-ECE-00-51*, Purdue University, Nov. 2000.

[Joh00b] M. Joham, Y. Sun, M.D. Zoltowski, M. Honig, and J. S. Goldstein, "A New Backward Recursion for the Multi-Stage Nested Weiner Filter Employing Krylov Subspace Estimation," submitted to *2001 IEEE Int'l Conf. on Acoustics, Speech, and Signal Processing*, Salt Lake City, Utah, May 2001.

[Poor00] V. Poor, "Turbo Multi-User Detection: An Overview," *IEEE Sixth International Symposium on Spread Spectrum Techniques & Applications (ISSSTA 2000)*, Parsippany, NJ, 6-8 September 2000.

[1] C. Chatterjee, and V. Roychowdhury, J. Ramos, and M. D. Zoltowski, "Self-Organizing and Adaptive Algorithms for Generalized Eigen-Decomposition," *IEEE Trans. on Neural Networks,* vol. 8, no. 6, November 1997, pp. 1518-1530.

[2] K. T. Wong and M. D. Zoltowski, "ESPRIT-Based Direction Finding Using A Sparse Rectangular Array with Dual-Size Spatial Invariances," *IEEE Transactions on Aerospace and Electronic Systems,* October 1998, pp. 1320-1336.

[3] T. F. Wong, T. M. Lok, J. S. Lehnert, and M. D. Zoltowski, "A Unified Linear Receiver for Direct-Sequence Spread-Spectrum Multiple Access Systems With Antenna Arrays and Blind Adaptation," *IEEE Trans. on Information Theory,* vol. 44, no. 2, March 1998, pp. 659-676.

[4] J. Ramos, C. P. Mathews, and M. D. Zoltowski, "Closed-Form 2D Angle Estimation Algorithms for Filled Circular Arrays with Arbitrary Sampling Lattices," *IEEE Trans. on Signal Processing,* vol. 47, no. 1, Jan. 1999, pp. 213-217.

[5] John Shynk and Michael D. Zoltowski, "Blind Adaptive Beamforming for Cellular Communications," **Highlights of Signal Processing for Communications**), *IEEE Signal Processing Magazine*, March 1999, pp. 27-31.

[6] K. T. Wong and M. D. Zoltowski, "Root-MUSIC Based Azimuth-Elevation Angle-of-Arrival Estimation for Uniformly-Spaced but Arbitrarily Oriented Velocity Hydrophones," *IEEE Transactions on Signal Processing,* vol. 47, no. 12, December 1999, pp. 1350-1360.

[7] J. Ramos, M. D. Zoltowski, and Hui Liu, "Low-Complexity Space-Time Processor for DS-CDMA Communications," *IEEE Trans. on Signal Processing,* vol. 48, no. 1, January 2000, pp. 39-52.

[8] K. T. Wong and M. D. Zoltowski, "Self-Initiating MUSIC-Based Direction Finding in Underwater Acoustic Particle Velocity-Field Beamspace," *IEEE Journal of Oceanic Engineering,* vol. 25, no. 2, pp. 262-273, April 2000.

[9] Yung-Fang Chen, M. D. Zoltowski, J. Ramos, C. Chatterjee, and V. Roychowdhury, "Reduced Dimension Blind Space-Time RAKE Receivers for DS-CDMA Communication Systems," *IEEE Trans. on Signal Processing,* vol. 48, no. 6, June 2000, pp. 1521-1536.

[10] Yung-Fang Chen and M. D. Zoltowski, "Blind RLS Based Space-Time Adaptive 2D RAKE Receivers for DS-CDMA Communication Systems," *IEEE Trans. on Signal Processing,* vol. 48, no. 7, July 2000, pp. 2145-2149.

[11] Tai-Ann Chen, M. P. Fitz, Wen-Yi Kuo, M. D. Zoltowski, and James Grimm, "A Space-Time Model for Frequency Nonselective Rayleigh Fading Channels with Applications to Space-Time Modems," *IEEE journal on Selected Areas in Communications (J-SAC) Wireless Communication Series*, vol. 18, no. 7, July 2000, pp. 1175-1190.

[12] M. D. Zoltowski and K. T. Wong, "ESPRIT-Based 2D Direction Finding with a Sparse Uniform Array of Electromagnetic Vector-Sensors," *IEEE Transactions on Signal Processing,* vol. 48, no. 8, August 2000, pp. 2205-2210.

[13] K. T. Wong and M. D. Zoltowski, "Closed-Form Eigenstructure-Based Direction Finding Using Arbitrary but Identical Subarrays on a Sparse Uniform Rectangular Array Grid," *IEEE Transactions on Signal Processing,* vol. 48, no. 8, August 2000, pp. 2195-2204.

[14] K. T. Wong and M. D. Zoltowski, "Closed-Form Direction Finding & Polarization Estimation with Arbitrarily-Spaced Electromagnetic Vector Sensors at Unknown Locations," *IEEE Transactions on Antennas and Propagation,* vol. 48, no. 5, May 2000, pp. 671-681.

[15] T. Krauss and M. D. Zoltowski, "Multiuser Second-Order Statistics Based Blind Channel Identification for Using a Linear Parameterization of the Channel Matrix," *IEEE Trans. on Signal Processing,* vol. 48, no. 9, September 2000, pp. 2473-2486.

[16] K. T. Wong and M. D. Zoltowski, "Self-Initiating MUSIC Based Direction Finding in Polarized Beamspace," accepted for publication in *IEEE Transactions on Antennas and Propagation,* acceptance letter dated 11 February 1999, **Scheduled for August 2000.**

[17] Anand Kannan, T. Krauss, and M. D. Zoltowski, "Separation of Co-channel Signals Under Imperfect Timing and Carrier Synchronization," accepted and scheduled to appear in *IEEE Transactions on Vehicular Technology*, Final acceptance letter dated 28 June 2000.

[18] Murat Torlak, Hui Liu, and M. D. Zoltowski, "OFDM Blind Carrier Offset Estimation: ESPRIT," *IEEE Transactions on Communications,* scheduled for Sept. 2000.

[19] T. Krauss, W. Hillery, and M. D. Zoltowski, "Downlink Specific Linear Equalization for Frequency Selective CDMA Cellular Systems," accepted for **Journal of VLSI Signal Processing, Special Issue on Signal Processing for Wireless Communications: Algorithms, Performance, and Architecture,** May 2001.

[20] M. D. Zoltowski and Thomas P. Krauss, "Space-Time Zero Forcing Equalization for 3G CDMA Forward Link to Restore Orthogonality of OVSF Channel Codes," (invited paper) *Proceedings 37th Annual Allerton Conference on Communications, Systems, and Computing,* 23-24 Sept. 1999, pp. 1274-1283.

[21] Thomas P. Krauss, Michael D. Zoltowski, and Samina Chowdhury, "Two-Channel Zero Forcing Equalization on CDMA Forward Link: Trade-Offs Between Multi-User Access Interference and Diversity Gains," *invited paper*, *Conf. Record of the 33rd Asilomar IEEE Conference on Signals, Systems, and Computers,* 25-27 Oct. 1999.

[22] Thomas P. Krauss and Michael D. Zoltowski, "MMSE Equalization for Saturated 3G CDMA Systems with OVSF Channel Codes and Frequency Selective Multipath," *invited paper*, *Proc. 2000 Conference on Information Sciences and Systems (CISS2000),* Princeton, NJ, pp. TP-3, March 15-17, 2000.

[23] Thomas P. Krauss and Michael D. Zoltowski, "Oversampling diversity versus dual antenna diversity for chip-level equalization on CDMA downlink," *First IEEE Sensor Array and Multichannel Signal Processing Workshop,* Cambridge, Massachusetts, 16-17 March 2000.

[24] Thomas P. Krauss, Michael D. Zoltowski, and Samina Chowdhury, "Chip-Level MMSE Equalization for High-Speed Synchronous CDMA in Frequency Selective Multipath," *SPIE's International Symposium on AeroSense,* Orlando, Florida, **SPIE Proceedings Volume 4045: Digital Wireless Communications**, 27-28 April 2000, pp.187-197.

[25] Thomas P. Krauss and M. D. Zoltowski, "Simple MMSE Equalizers for CDMA Downlink to Restore Chip Sequence: Comparison to Zero-forcing and RAKE," *Proc. of 2000 IEEE Int'l Conf. on Acoustics, Speech, and Signal Processing*, Istanbul, Turkey, vol, V, pp. 2865-2868, 5-9 June 2000.

[26] Samina Chowdhury, Michael D. Zoltowski, and Scott Goldstein, "Reduced-Rank Adaptive MMSE Equalization for the Forward Link in High-Speed CDMA," *invited paper*, *43rd IEEE Midwest Symposium on Circuits and Systems*, East Lansing, MI, 8-11 August 2000.

[27] Thomas P. Krauss and Michael D. Zoltowski, "MMSE Equalization Under Conditions of Soft Hand-Off," *IEEE Sixth International Symposium on Spread Spectrum Techniques & Applications (ISSSTA 2000)*, Parsippany, NJ, 6-8 September 2000, pp. 540-544 **Winner of Best Paper Award.**

[28] Thomas P. Krauss and M. D. Zoltowski, "Chip-level MMSE Equalization at the Edge of the Cell," *2nd IEEE Wireless Communications and Networking Conference (WCNC 2000)*, Chicago, IL, 23-28 September 2000.

[29] Samina Chowdhury, Michael D. Zoltowski, and J. Scott Goldstein, "Application of Reduced-Rank Chip-Level MMSE Equalization to Forward Link DS-CDMA with Frequency Selective Multipath," accepted for *Proceedings 38th Annual Allerton Conference on Communications, Systems, and Computing,* 4-6 Oct. 2000.

[30] M. D. Zoltowski and D. Tseng, "Blind Channel Identification for Narrowband Digital Communications Based on Parametric Modelling of the Channel Impulse Response," (*invited paper*) *Proceedings 35th Annual Allerton Conference on Communications, Systems, and Computing,* 29 Sept.-1 Oct., 1997, pp. 503-512.

[31] M. D. Zoltowski and Der-Feng Tseng, "Blind Multichannel Equalization for Wideband TDMA Based on Subbanding and the SIMO Cross-Relation," (invited paper) *Proceedings 36th Annual Allerton Conference on Communications, Systems, and Computing,* 23 Sept.- 25 Sept. 1998, pp. 381-390.

[32] M. D. Zoltowski and Der-Feng Tseng, "Blind Multichannel Identification for High-Speed TDMA," (invited paper) *Proceedings of Milcom '98,* Boston, MA, 18-21 Oct. 1998. **Winner of "The Fred Ellersick MILCOM Award for Best Paper in the Unclassified Technical Program".**

[33] M. D. Zoltowski and D. Tseng, "A Weighted Energy Concentration Criterion for Improving the Performance of the Cross-Relation Method of Blind Channel Identification at Low SNR" *invited paper*, *Conf. Record of the 32nd Asilomar IEEE Conference on Signals, Systems, and Computers,* pp. 785-789, 30 Oct.-1 Nov. 1998.

[34] M. D. Zoltowski and Der-Feng Tseng, "A Subbanding Approach to Blind Space-Time Equalization for Wideband TDMA Based on the SIMO Cross-Relation," *SPIE's International Symposium on AeroSense,* Orlando, Florida, **SPIE Proceedings Volume 3708: Digital Wireless Communications**, pp. 20-33, 5-9 April 1999.

[35] M. D. Zoltowski and Der-Feng Tseng, "A Filter Bank Approach to Blind Space-Time Equalization for Wideband TDMA," *Proceedings of IEEE Vehicular Technology Conference (VTC) '99,*, Houston, TX, 17-21 May 1999.

[36] M. D. Zoltowski and Der-Feng Tseng, "A Weighted Energy Concentration Criterion for Improving the Performance of Deterministic Least Squares Blind Channel Identification," *Proceedings of 1998 IEEE Midwest Symposium on Circuits and Systems MWSCS '98,* University of Notre Dame, 9-12 August 1998, pp. 148-152.

[37] T. A. Thomas and M. D. Zoltowski, "Nonparametric Interference Cancellation and Equalization for Narrowband TDMA Communications Via Space-Time Processing," *IEEE Signal Processing Advance in Wireless Communications Workshop - SPAWC '97,* Paris, France, 16-18 April 1997, pp. 185-188.

[38] T. A. Thomas and M. D. Zoltowski, "Novel Receiver Signal Processing for Interference Cancellation and Equalization in Cellular TDMA Communications," *Proc. of the 1997 IEEE Int'l Conf. on Acoustics, Speech, and Signal Processing,* 21-24 April 1997, Munich, Germany, pp. 3881-3884.

[39] T. A. Thomas and M. D. Zoltowski, "Novel Receiver Space-Time Processing for Interference Cancellation and Equalization in Narrowband TDMA Communications," *Proceedings of IEEE Vehicular Technology Conference (VTC) '97,* Phoenix, AZ, 4-7 May 1997, pp. 160-164.

[40] M. D. Zoltowski, D. Tseng and T. A. Thomas, "On The Use of Basis Functions in Blind Equalization Based on Deterministic Least Squares," *invited paper*, *Conf. Record of the 31st Asilomar IEEE Conference on Signals, Systems, and Computers,* vol. 1, pp. 816-822, 30 Oct.-1 Nov. 1997.

[41] M. D. Zoltowski and T A. Thomas, "Nonparametric Channel Identification, Interference Cancellation, and Multichannel Equalization for Narrowband Digital Communications," (invited paper) *Proceedings of Milcom '97,* Monterey, CA, vol. 3, pp. 1082-1086, 2-5 Nov. 1997.

[42] M. D. Zoltowski and T. A. Thomas, "Novel Zero-Forcing, MMSE, and DFE Equalizer Structures Employing Oversampling and Multiple Receiver Antennas," *invited paper*, *Conf. Record of the 32nd Asilomar IEEE Conference on Signals, Systems, and Computers,* pp. 1111-1116, 30 Oct.-1 Nov. 1998.